Series R®
Rotary Liquid Chiller

70 to 125 Tons
Water-Cooled and Condenserless

Built For the Industrial and Commercial Markets

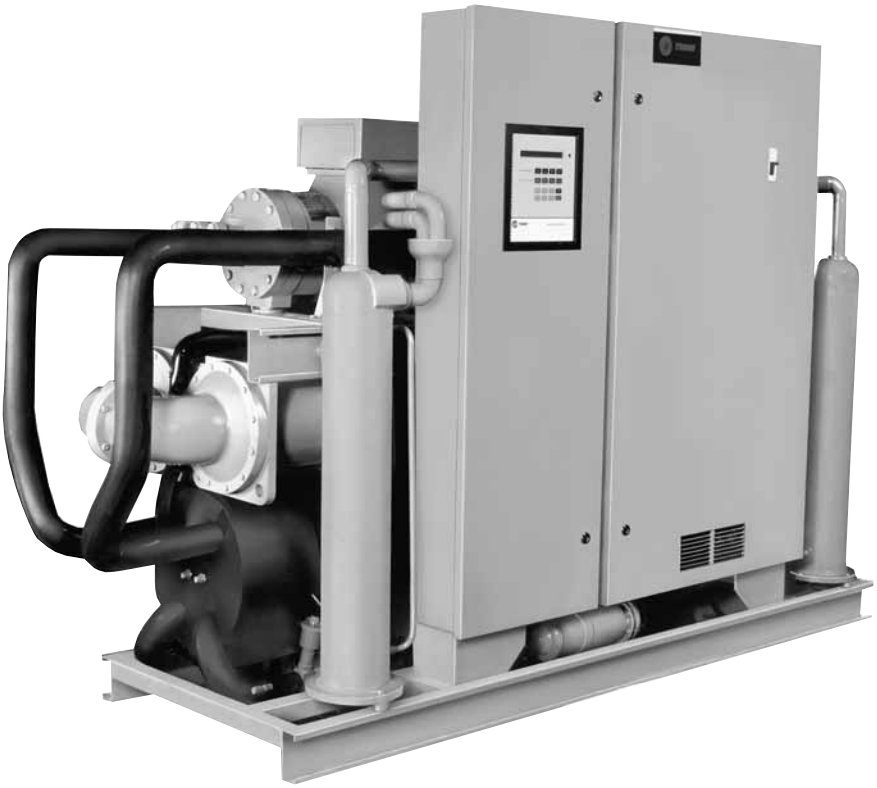

December 2006

RLC-PRC027-EN

Introduction Model RTWA

The RTWA offers high reliability, ease of installation, and energy efficiency due to its advanced design, low speed/ direct-drive compressor and proven Series R chiller performance.

The advantages of the RTWA are:

- Proven reliability
- High energy efficiency
- Low sound levels
- Compact size
- Bolt-together construction
- Low maintenance
- Dual independent refrigerant circuits

The Series R helical rotary chiller is an industrial grade design built for the commercial markets. It is ideal for office buildings, hospitals, schools, retailers and industrials.

Applications:

- Comfort cooling
- Industrial process cooling
- Ice/thermal storage
- Heat recovery
- Low temperature process cooling

What makes the 70-125 ton Series R chillers special? These chillers have been designed to meet growing customer needs.

The standard unit features include:

- Evaporator water flow protection
- Bolt together construction
- Hot gas bypass eliminated
- Refrigerant isolation valves standard (both discharge and suction) on RTWA
- Single point power on all units
- Low side relief valves
- Grooved pipe connections on both evaporators and condensers (RTWA) for ease of installation
- Control power transformer (standard)
- Suction and discharge refrigerant pressure readouts from UCM
- Factory installed insulation
- Adaptive Control as standard
- Current readings taken directly from the Clear Language Display
- Factory installed condenser water temperature sensing kit option
- Two line by 40 character Clear Language Display

Figure F-1 — Model RTWA

Contents

The standard ARI rating condition (44 F /2.4 GPM per ton & 85 F /3.0 gpm per ton or 6.7 C /0.043 L/s per kW & 29.4 C /0.054L/s per kW) and IPLV are ARI certified. All other ratings, including the following, are outside the scope of the certification program and are excluded:

- Glycol.
- 50 Hz.
- Condenserless models (RTUA).

Features and Benefits

Series R Compressor

Proven Reliable Design — The 70-125 ton Series R® units use two Trane helical rotary screw compressors. These compressors were designed, tested and built to the same rugged standards as the larger Series R compressors.

The Series R Helical Rotary Compressor

- Direct-drive, low speed for high efficiency and high reliability.
- Simple design resulting in high reliability and low maintenance.
- Suction gas-cooled motor, operating at lower temperatures for longer motor life.
- Five minute start-to-start/ two minute stop-to-start anti-recycle timer allows for closer water loop temperature control.
- Years of research and thousands of hours of testing, much of it at severe operating conditions beyond normal air conditioning applications.
- Trane is the world's largest manufacturer of large helical rotary compressors with over 100,000 commercial and industrial installations worldwide, proving that the Trane helical rotary compressor has an excellent reliability rate**, which means that our chillers continue to run when you need them**.

Only Four Moving Parts — Each helical rotary screw compressor used on 70-125 ton units has only four moving parts: the two rotor assemblies, a variable unloader valve, and a step unloader valve. Capacity control is achieved by modulation of the load/unloader valves. The Trane helical rotary screw compressor does not have pistons, connecting rods, suction and discharge valves or a mechanical oil pump. Fewer moving parts increases reliability and endurance.

Resistance To Liquid Slugging — The robust design of the Series R compressor can ingest amounts of liquid refrigerant that would severely damage reciprocating compressor valves, piston rods and cylinders.

Proven Design Through Testing and Research — At Trane, we MUST fail compressors in the laboratory to assure they won't fail in the field. Without failures, there is no way to be certain whether the final design is satisfactory or potentially unreliable. The Compressor Accelerated Life Test is a proven method to induce failure. This test is designed to overstress all parts and quickly identify any weak areas. The extreme test conditions far exceed actual field applications. Trane engineers fail and redesign compressors until a reliable product is assured. Our leadership in helical rotary compressor technology is recognized worldwide.

Precise Rotor Tip Clearances — Higher energy efficiency in a Trane helical rotary screw compressor is obtained by reducing the rotor tip clearances. This reduces the leakage between high and low pressure cavities during compression. Precise rotor tip clearance is achieved with the latest manufacturing and machining technology. Trane is the first helical rotary compressor manufacturer to electronically check compressor parts machining accuracy as part of the standard production process.

- Capacity control with unloader valves, provides load matching such that the need for hot gas bypass is eliminated.
- PID chilled water setpoint control maintains chilled water supply to within ± ½ degree F (0.28 C) of setpoint.

Optimized Compressor Parts Profiles — Rotors and load/unloader valves are unique designs, optimized for pressure ranges in air conditioning applications. The load/unloader valve has a unique profile that resulted from computer performance modeling in typical part load situations.

Features and Benefits

Operation

Figure F-2 — Trane Helical Rotary Screw Compressor

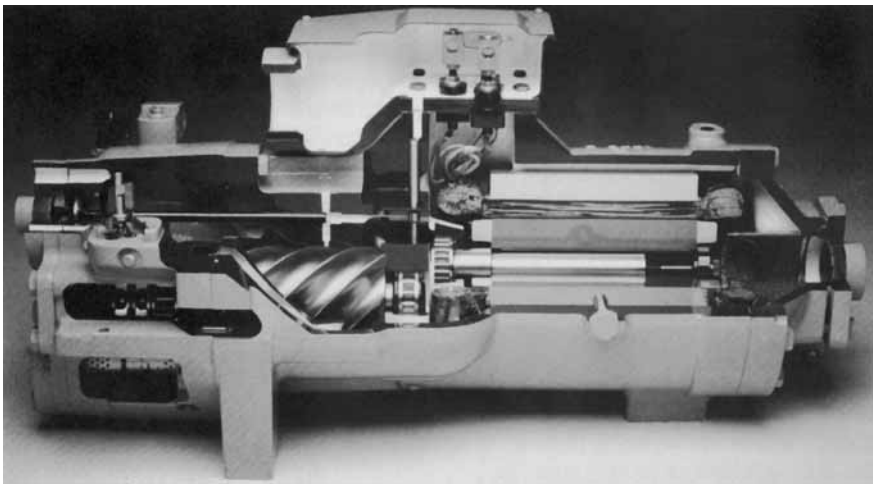

Excellent Part Load Performance
In the tradition of the 175-450 ton water-cooled Series R® chillers, the 70-125 ton chillers have great part load performance. The result is optimized part load performance far superior to single reciprocating compressors.

Electronic Expansion Valve
The electronic expansion valve, coupled with Trane's Adaptive Control™ microprocessor, significantly improves part load performance by minimizing superheat in the evaporator and allowing the chiller to run at reduced condensing temperatures. Chillers using conventional TXV's run at higher head pressures and consume more power at part loads. Additionally, the electronic expansion valve and its microprocessor control provide better control stability of variable load and pressure changes than a TXV. Under these conditions a conventional TXV may never achieve control stability causing extended periods of TXV "hunting" and liquid slugging.

Capacity Control and Load Matching
The compressor unloader valves modulate the compressor capacity to match the building cooling load. Reciprocating chillers with minimal step capacity control operate at a cooling capacity equal to or greater than the load. The excess capacity is lost in the form of overcooling, which will remove excessive building latent heat. In turn, the building will have a lower latent load than normal comfort requires. The result is an increase in chiller energy costs, particularly at the part load conditions at which the chiller operates most of the time.

Figure F-3 — Electronic Expansion Valve

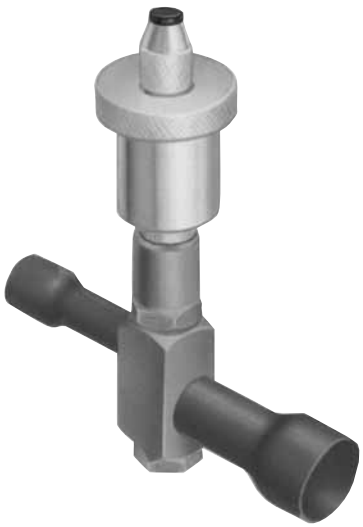

Maintain Chilled Water Supply Within ± 1/2 Degree F of Setpoint
The Series R chiller and compressor chiller maintain accurate temperature control to ± 1/2 degree F (0.28 C) due to valve modulation. Reciprocating chillers typically can only maintain water temperature tolerances to ± 2 degrees F (1.1 C).

Reduce Compressor Cycling — Trane helical rotary screw compressors are more tolerant of cycling than their reciprocating counterpart. Modulating capacity control offers better compressor reliability. Compressor cycling, typical of reciprocating compressors, will decrease compressor component life on parts such as motors and valves.

Features and Benefits

Installation

Compact Size
The 70-125 ton Series R® chillers have a small operating footprint., designed with the retrofit and replacement market in mind. The small footprint not only saves valuable equipment room space but also simplifies installation. The chillers fit through standard (36 inch or 91 cm) single-width doors and in most freight elevators. When necessary, the chillers have been designed with bolt-together construction for easy unit disassembly.

Simple Installation
The lightweight design of the new units simplifies rigging while reducing cost and installation time.

- Simplified piping; the only water piping required is for the evaporator and condenser.
- No oil cooler or purge system connections.
- Simple incoming power connection.
- Standard unit mounted starter eliminates additional jobsite labor requirements.
- Extensive factory testing for a virtually trouble-free startup.
- Factory installed controls and options are completely tested to maintain minimal start-up time and expenses.

Shipping
Trane 70-125 ton packaged chillers (RTWA) are shipped with a full factory refrigerant and oil charge. This reduces field labor, material costs and installation costs. The RTUA is shipped with an oil charge and a nitrogen holding charge.

Single-Source Reliability
RTUA compressor chillers can be matched with corresponding Trane RTCA air-cooled condensers. Pressure readouts and fan staging are both displayed on the UCM when RTUA is used in conjunction with the RTCA.

Figure F-4 —
Model RTCA Air-Cooled Condenser

Features and Benefits

Unit Control Module

Trane's Adaptive Control™ microprocessor control system enhances the Series R® chiller by providing reliable chiller control technology. An easy-to-use operator interface panel displays all operating and safety diagnostics. Adaptive Control microprocessor features shut down the chiller only if absolutely necessary. The Unit Control Module (UCM) anticipates potential problems and initiates corrective actions to prevent nuisance tripouts.

Adaptive Control™ Microprocessor
The Adaptive Control microprocessor on the 70-125 ton Series R chiller employs one of the most advanced microprocessor controls available on any packaged water chiller in the market today. The microcomputer-based controller optimizes controls around the chiller application and is designed for the specific components used in the Series R chiller, specifically the compressor protection system. A leaving chilled water temperature control algorithm maintains accurate temperature control, minimizes the drift from setpoint and provides better building comfort. The microprocessor control incorporates improved chiller start-up, load limiting, lead/lag, and compressor run time equalization functions into standard chiller operation. Interface with building automation systems remains flexible and easy.

Safety Controls
A centralized controller provides a high level of machine protection. The safety controls are designed to avoid compressor and/or evaporator operation failures, to minimize nuisance shutdowns. The Unit Control Module (UCM) with Adaptive Control directly senses the control variables that govern the operation of the chiller: motor current draw, evaporator temperature, condenser temperature, etc. When any of the variables approach a limiting condition where the unit may be shutdown, the UCM takes corrective action to avoid shutdown and keep the chiller operating. This is achieved through combined actions of compressor unloader valves and electronic expansion valve modulation. Additionally, the UCM optimizes total unit power consumption during normal operating conditions. During abnormal conditions, the UCM will continue to optimize chiller performance by taking the corrective action necessary to avoid shutdown. This keeps cooling capacity available until the problem can be solved. Whenever possible, the chiller is allowed to perform its function; make chilled water. In addition, microcomputer controls provide safety protections such as under/over voltage (option), phase reversal, phase loss, phase imbalance, low voltage and overload protection. These, safety controls help the chiller to remain in operation and all of the building occupants satisfied.

Reduced Service Calls
Unnecessary service calls and unhappy tenants are avoided. Only when the UCM has exhausted the corrective actions and the chiller is still approaching an operating limit will the chiller shut down. Typically, **controls on other chillers will shut down the chillers, quite probably just when they are needed the most.**

For example:
A typical five year old chiller might trip out on high pressure cutout on a 100 degree F day in August. A hot day in August is just when comfort cooling is needed the most. In contrast, as the chiller approaches a high pressure cutout, the Series R chiller with an Adaptive Control microprocessor will modulate the electronic expansion valve and the load/unloader valve to a condition at which the chiller can operate safely and efficiently.

Figure F-5 — UCM Panel Interface

Monitoring and Diagnostics
Since the microcomputer provides all control functions, it can easily indicate such parameters as leaving chilled water temperature. All of the monitoring and diagnostic information is displayed directly on a clear language microcomputer display. If a failure does occur, one of many clear language display (CLD) messages will indicate the problem.

Equal Compressor Sequencing
Trane maximizes compressor life by equalizing both the number of starts and the operating hours on each compressor. The UCM will start the compressor with the least number of starts and turn off the compressor with the most operating hours. Conventional "auto" lead-lag control will equalize starts, but running hours will typically be unequal. Equalizing both starts and running hours will provide equal compressor wear.

"Built-in" Chiller Flow Protection
The UCM automatically detects a no waterflow condition to protect the evaporator barrel from freezing. The unit controls accomplishes this by monitoring the entering and leaving water temperatures to determine if there is water flowing through the evaporator.

Easy Chiller System Logging
The UCM displays data required to log a chiller system. The CLD eliminates diagnostic codes, while providing the following information:

- Entering and leaving chilled water temperatures
- Entering and leaving condenser water temperatures (RTWA option)
- Ambient air temperature (RTUA only)
- Evaporator and condenser refrigerant temperatures and pressures
- Compressor suction temperature
- Percent RLA for each compressor
- Percent line voltage
- Compressor starts and running hours
- Active setpoints
  - — chilled water setpoint
  - — current limit setpoint
  - — ice termination setpoint
  - — low ambient lockout setpoint
- Over 90 diagnostic and operating conditions

Controls

Stand Alone Controls

Simple Interface with Other Control Systems
Microprocessor controls afford simple interface with other control systems, such as time clocks, building automation systems and ice storage systems. Wiring to the chiller can be as simple as two wires! This means you can have the flexibility to meet job requirements while not having to learn a complicated control system.

Standalone Unit
Interface to standalone chillers is very simple; only a remote auto/stop for scheduling is required for chiller operation. Signals from the chilled water pump contactor auxiliary or a flow switch are wired to the chilled waterflow interlock. Signals from a time clock or some other remote device are wired to the external auto/stop input. Unit controls provide an output to turn pumps on and off and should remain on for a minimum of one minute to allow the chiller to complete its shutdown cycle.

Standard Features

1. External Auto/Stop
A jobsite provided contact closure will turn the unit on and off.

Note: Do not use the chilled water pump to stop the chiller.

2. Chilled Waterflow Interlock
A jobsite provided contact closure from a chilled water pump contactor or a flow switch is required and will allow unit operation if a load exists. This feature will allow the unit to run in conjunction with the pump system.

3. External Interlock
A jobsite supplied contact opening wired to this input will turn the unit off and require a manual reset of the unit microcomputer. This closure is typically triggered by a jobsite supplied system such as a fire alarm.

4. Chilled Water Pump Control
Unit controls provide an output to control chilled water pump(s). One contact closure to the chiller is all that is required to initiate the chilled water system.

5. Remote Running and Alarm Indication Contacts
The unit provides three single-pole/double-throw contact closures to indicate that a failure has occurred, if any compressors are running, or if the compressors are running at maximum capacity. These contact closures may be used to trigger jobsite supplied alarm lights or alarm bells.

Ice Making Systems
Simple and smart control strategies are another advantage the Model RTWA chiller offers for ice storage applications. Trane Tracer™ building management systems can actually anticipate how much ice needs to be made at night and operate the system accordingly. The controls are integrated right into the chiller. Two wires and preprogrammed software dramatically reduce field installation cost and complex programming.

When the ice making option is ordered, the water-cooled Series R™ chiller will have two operating modes, ice making and normal daytime cooling. In the ice making mode, the water-cooled Series R™ chiller will operate at full compressor capacity until the return chilled fluid temperature entering the evaporator meets the ice making setpoint. This ice making setpoint is manually adjusted on the unit's microcomputer. Two input signals are required to the water-cooled Series R™ chiller for the ice making option. The first is an auto/stop signal for scheduling and the second is required to switch the unit in between the ice making mode and normal daytime operation. The signals are provided by a remote job site building automation device such as a time clock or a manual switch. In addition, the signals may be provided over the twisted wire pair from a Tracer system or LonTalk Communication Interface.

Required Features

1. External Auto/Stop (standard)
2. Ice making control

Additional Features That May Be Used

1. Remote running and failure indication contacts
2. Communications interface (for Tracer systems)
3. Chilled water temperature reset (Indoor zone reset not available with ice making option).

External Trane Devices Required — None

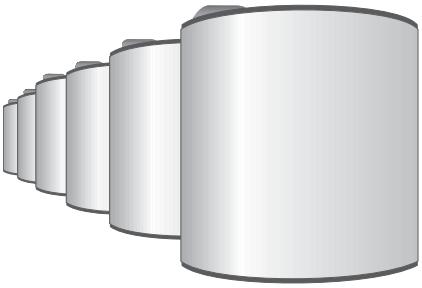

Ice Tanks

Trane Chiller Plant Control
The Tracer™ Summit™ Chiller Plant Building Management System with Chiller Plant Control provides building automation and energy management functions through stand-alone control. The Chiller Plant Control is capable of monitoring and controlling your entire chiller plant system.

Application software available:
- Time-of-day scheduling
- Demand limiting
- Chiller sequencing
- Process control language
- Boolean (binary) processing
- Zone control
- Reports and logs
- Custom messages
- Run time and maintenance
- Trend log
- PID control loops

And of course, the Trane Chiller Plant Control can be used on a stand-alone basis or tied into a complete building automation system.

When the Series R™ 70-125 ton chiller is used in conjunction with a Trane Tracer™ Summit™ system, the unit can be monitored and controlled from a remote location. The water-cooled Series R™ 70-125 ton chiller can be controlled to fit into the overall building automation strategy by using time of day scheduling, timed override, demand limiting, and chiller sequencing. A building owner can completely monitor the Series R™ chiller from the Tracer system, since all of the monitoring information indicated on the unit controller's microcomputer can be read off the Tracer system display. In addition, all the powerful diagnostic information can be read back at the Tracer system. Best of all, this powerful capability comes over a single twisted pair of wires!

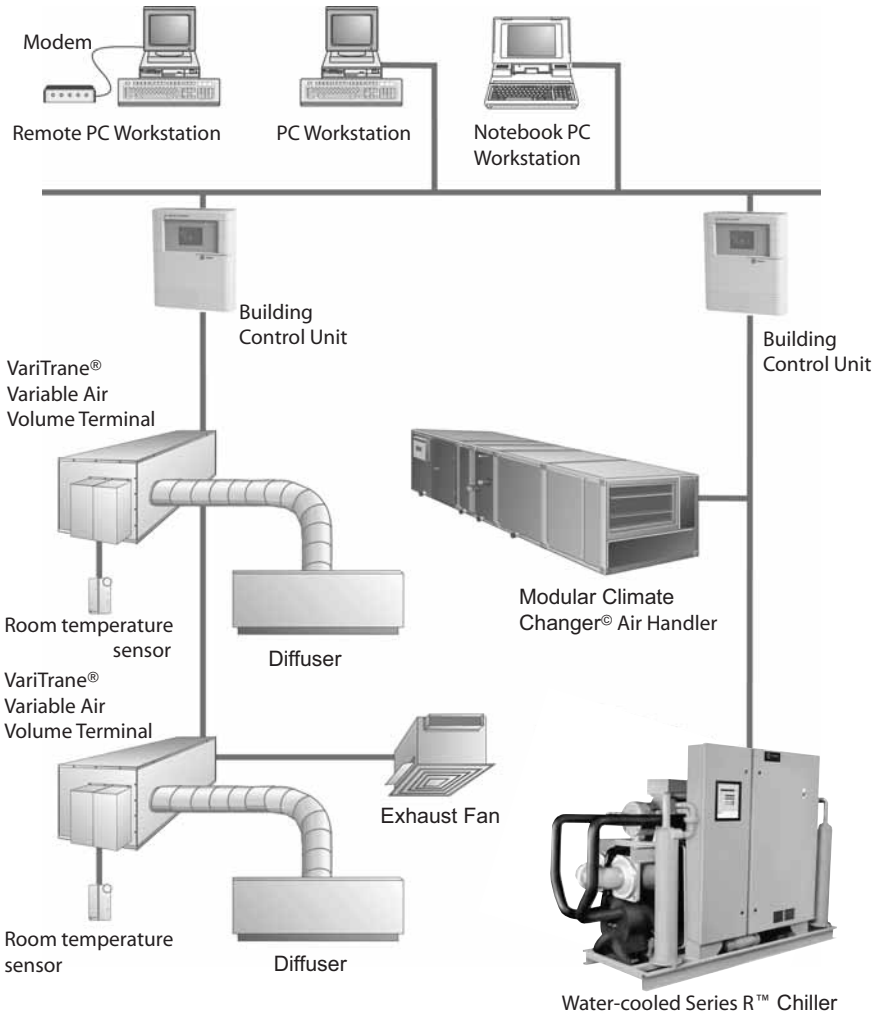

Control functions include auto/stop, adjustment of leaving water temperature setpoint, compressor operation lockout for kW demand limiting and control of ice making mode. The Tracer system reads monitoring information such as entering and leaving evaporator water temperatures and outdoor air temperature. Over 60 individual diagnostic codes can be read by the Tracer system.

In addition, the Tracer system can provide sequencing control for up to 25 units on the same chilled water loop. Pump sequencing control can be provided from the Tracer system. Tracer ICS is not available in conjunction with the remote display or the external setpoint capability.

Required Features
Tracer Interface

Additional Options That May Be Used
Ice Making Control

External Trane Devices Required
Tracer Summit™, Tracer 100 System or Tracer Chiller Plant Control

Trane Chiller Plant Automation
Trane's depth of experience in chillers and controls makes us a well-qualified choice for automation of chiller plants using Series R® chillers®. The chiller plant control capabilities of the Trane Tracer Summit® building automation system are unequaled in the industry. Our chiller plant automation software is fully pre-engineered and tested. It is a standard software application, not custom programming which can prove to be difficult to support, maintain, and modify.

Energy Efficiency
Trane chiller plant automation intelligently sequences starting of chillers to optimize the overall chiller plant energy efficiency. Individual chillers are designated to operate as base, peak, or swing based on capacity and efficiency. Sophisticated software automatically determines which chiller to run in response to current conditions. The software also automatically rotates individual chiller operation to equalize runtime and wear between chillers.

Trane chiller plant automation enables unique energy-saving strategies. An example is controlling pumps, and chillers from the perspective of overall system energy consumption. The software intelligently evaluates and selects the lowest energy consumption alternative.

Regulatory Compliance Documentation
Comprehensive documentation of refrigerant management practices is now a fact of life. Trane chiller plant automation generates the reports mandated in ASHRAE Guideline 3.

Keeping Operators Informed
A crucial part of efficiently running a chiller plant is assuring that the operations staff is instantly aware of what is happening in the plant. Graphics showing schematics of chillers, piping, pumps, and towers clearly depict the chiller plant system, enabling building operators to easily monitor overall conditions. Status screens display both current conditions and upcoming automated control actions to add or subtract chiller capacity. Series R™ and other chillers can be monitored and controlled from a remote location.

Tracer Summit features standard report templates listing key operating data for troubleshooting and verifying performance. Reports for each type of Trane chiller and three and six-chiller systems are also standard. Detailed reports showing chiller runtimes aid in planning for preventative maintenance.

Swift Emergency Response
We understand the importance of maintaining chilled water production while protecting your chillers from costly damage. If no water flow is detected to a chiller's piping, the start sequence is aborted to protect the chiller. The next chiller in the sequence is immediately started to maintain cooling.

In the event of a problem, the operator receives an alarm notification and diagnostic message to aid in quick and accurate troubleshooting. A snapshot report showing system status just prior to an emergency shutdown helps operators determine the cause. If emergency conditions justify an immediate manual shutdown, the operator can override the automatic control.

Integrated Comfort™ Capabilities
When integrated with a Tracer Summit building management system performing building control, Trane chiller plant automation coordinates with Tracer Summit applications to optimize the total building operation. With this system option, the full breadth of Trane's HVAC and controls experience are applied to offer solutions to many facility issues. If your project calls for an interface to other systems, Tracer Summit can share data via BACnet™, the ASHRAE open systems protocol.

Controls

System Integration

Microcomputer controls afford simple interface with other control systems, such as time clocks, building automation systems and ice storage systems. This means you have the flexibility to meet job requirements while not having to learn a complicated control system. This setup has the same standard features as a stand-alone water chiller, with the possibility of having the following optional features.

Easy Interface to A Generic Building Management System
Controlling the air-cooled Series R™ chiller with building management systems is state-of-the-art, yet simple with BACnet with Tracer™ Summit,™ LonTalk Chiller Interface or generic building management system hardwire points.

LonTalk Chiller Controls
LonTalk Communications Interface for Chillers (LCI-C) provides a generic automation system with the LonMark chiller profile inputs/outputs. In addition to the standard points, Trane provides other commonly used network output variables for greater interoperability with any automation system.

LonTalk is a communications protocol developed by the Echelon Corporation. The LonMark association develops control profiles using the LonTalk communication protocol. LonTalk is a unit level communications protocol, unlike BACNet used at the system level.

Additional Outputs:
- Evaporator water pump request
- Evaporator refrigerant temperature
- Evaporator refrigerant pressure
- Condenser water pump request
- Condenser refrigerant temperature
- Condenser refrigerant pressure
- Compressor running
- Maximum capacity status
- Current per line
- Voltage per phase
- Oil temperature per compressor
- Compressor starts
- Compressor run time

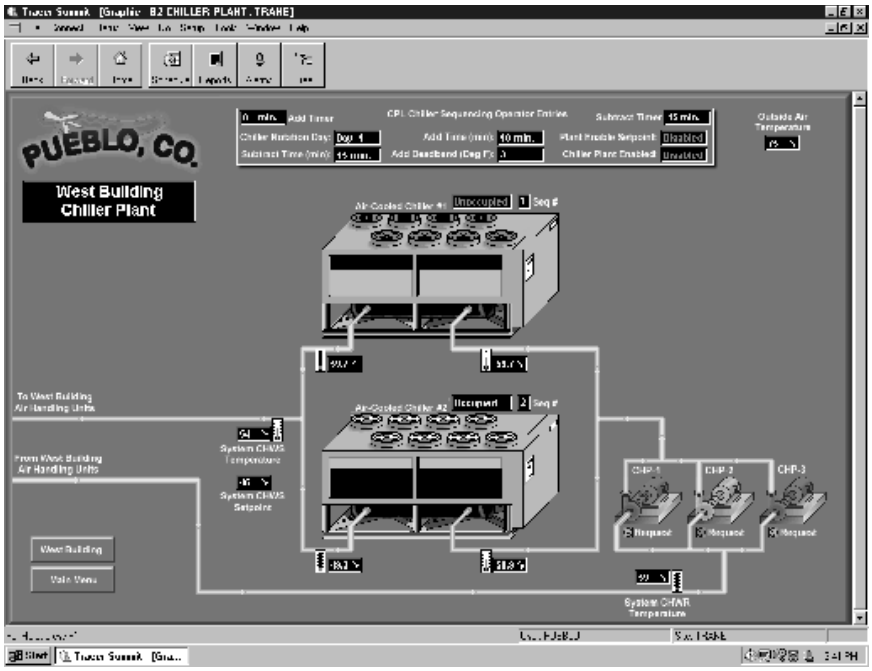

Trane controls or another vendor's system can use these points with ease to give the operator a complete picture of how the system is running.

Hardwire Points

Chiller inputs include:
- Chiller enable/disable
- Circuit enable/disable
- Chilled water setpoint
- Current limit setpoint
- Ice making enable

Chiller outputs include:
- Compressor running indication
- Alarm indication (CKt 1/CKt2)
- Maximum capacity

Alarm Indication Contacts
The unit provides three single-pole/double-throw contact closures to indicate that a failure has occurred, compressor on/off status, or if the compressors are running at maximum capacity. These contact closures may be used to trigger jobsite supplied alarm lights or alarm bells.

External Chilled Water Setpoint
Allows the external setting independent of the front panel setpoint by one of two means:
a) 2-10 VDC input
b) 4-20 mA input

External Current Limit Setpoint
Allows the external setting independent of the front panel setpoint by one of two means:
a) 2-10 VDC input
b) 4-20 mA input

Ice Making Control
Provides interface with ice making control systems.

Chilled Water Temperature Reset
Reset can be based on return water temperature or outdoor air temperature.

Application Considerations

Certain application constraints should be considered when sizing, selecting and installing Trane Series R™ chillers. Unit and system reliability is often dependent upon properly and completely complying with these considerations. Where the application varies from the guidelines presented, it should be reviewed with your local Trane sales engineer.

Unit Sizing
Unit capacities are listed in the performance data section. Intentionally oversizing a unit to assure adequate capacity is not recommended. Erratic system operation and excessive compressor cycling are often a direct result of an oversized chiller. In addition, an oversized unit is usually more expensive to purchase, install, and operate. If oversizing is desired, consider using two units.

Condenser Water Limitations
Trane Series R® chillers start and operate satisfactorily over a range of load conditions with uncontrolled entering condenser water temperature. Reducing the condenser water temperature is an effective method of lowering power input required. However, beyond certain limits,the effect of further lowering the condenser water temperature is a relative increase in power consumption. This is because as the loader/unloader valve closes and the compressor unloads, compressor efficiency is determined by several factors. The leaving chilled water temperature and the percent of load have the most direct impact on the optimum condenser water temperature.

In general, continuous machine operation with entering condenser water temperature below 55 degrees F (12.8 C) is not recommended. When the entering condenser water temperature is expected to drop below 55 degrees F, it is recommended that some form of condenser water temperature control be used to ensure optimum machine performance. From a system perspective, improved chiller efficiency may be offset by increased tower fan and pumping costs. In order to achieve system optimization, each subsystem must be operated in the most efficient manner possible while continuing to satisfy the current building load.

Short Evaporator Water Loops
The proper location of the chilled water temperature control sensor is in the supply (outlet) water. This location allows the building to act as a buffer and assures a slowly changing return water temperature. If there is not a sufficient volume of water in the system to provide an adequate buffer, temperature control can be lost, resulting in erratic system operation and excessive compressor cycling. A short water loop has the same effect as attempting to control from the building return water.

As a guideline, ensure the volume of water in the evaporator loop equals or exceeds two times the evaporator flow rate. For a rapidly changing load profile, the amount of volume should be increased.

To prevent the effect of a short water loop, the following item should be given consideration:

A storage tank or larger header pipe to increase the volume of water in the system and , therefore, reduce the rate of change of the return water temperature.

Water Treatment
The use of untreated or improperly treated water in chillers may result in scaling, erosion, corrosion or algae. It is recommended that the services of a qualified water treatment specialist be engaged to determine what water treatment, if any, is advisable. Trane assumes no responsibility for the results of untreated, or improperly treated water.

Water Pumps
Avoid specifying or using 3600 rpm (3000 rpm at 50 Hz) condenser water and chilled water pumps. Such pumps may operate with objectionable noises and vibrations.
In addition, a low frequency beat may occur due to the slight difference in operating rpm between water pumps and Series R chiller motors. Where noise and vibration-free operation are important, Trane encourages the use of 1750 rpm pumps (1450 rpm at 50 Hz).

Remote Condenser
Remote condensers should be located as close as possible to the chiller to ensure minimum pressure drops of discharge refrigerant. If non-Trane condensers are provided, a subcooling circuit must be provided in order to achieve cataloged performances.

Installation/Acoustics
Refer to Trane Engineering Bulletin RLC-EB-13 for both chiller sound ratings, installation tips and considerations on chiller location, pipe isolation, etc. Using the information provided in this engineering bulletin, contact a certified sound consultant to aid in proper mechanical room design and treatment.

Application Considerations

Unit Placement

1. Setting The Unit
A base or foundation is not required if the selected unit location is level and the base is strong enough to support the unit's operating weight as listed in the General Data tables.

2. Isolation and Sound Emission
The most effective form of isolation is to locate the unit away from any sound-sensitive area. Structurally transmitted sound can be reduced by ELASTOMERIC vibration eliminators. Spring isolators have proven to be of little benefit on Series R™ chiller installations and are not recommended. An acoustical engineer should always be consulted in critical sound applications.

For maximum isolation effect, water lines and electrical conduit should also be isolated. Wall sleeves and rubber isolated piping hangers can be used to reduce the sound transmitted through water piping. To reduce the sound transmitted through electrical conduit, use flexible electrical conduit.

State and local codes on sound emissions should always be considered. Since the environment in which a sound source is located affects sound pressure, unit placement must be carefully evaluated. Sound information for Trane Series R™ chillers are available on request.

3. Servicing
Adequate clearance for evaporator and compressor servicing should be provided. Recommended minimum space envelopes for servicing are located in the dimensional data section and can serve as a guideline for providing adequate clearance. The minimum space envelopes also allow for control panel swing and routine maintenance requirements. Local code requirements may take precedence.

4. RTCA Unit Location

a. General
Unobstructed flow of condenser air is essential to maintain chiller capacity and operating efficiency. When determining unit placement, careful consideration must be given to assuring a sufficient flow of air across the condenser heat transfer surface. Two detrimental conditions are possible and must be avoided if optimum performance is to be achieved: warm air recirculation and coil starvation.

Warm air recirculation occurs when discharge air from the condenser fans is recycled back to the condenser coil inlet. Coil starvation occurs when free airflow to (or from) the condenser is restricted.

Both warm air recirculation and coil starvation cause reductions in unit efficiency and capacity because of the higher head pressures associated with them. The Series R™ RTCA condenser offers an advantage over competitive equipment in these situations. Performance is minimally affected in many restricted air flow situations due to its unique condensing coil geometry. Also, through its advanced Adaptive Control™ microprocessor logic, the chiller will attempt to stay on-line where competitive chillers would usually shut down.

Trane's unique Adaptive Control microprocessor has the ability to understand the operating environment of the chiller and adapt to it by first optimizing its performance and second, staying on line through abnormal conditions. For example, high ambient temperatures combined with a restricted air flow situation will generally not cause the Series R™ chiller to shut down. Competitive chillers would typically shut down on a high pressure nuisance cut-out in these conditions.

Debris, trash, supplies, etc. should not be allowed to accumulate in the vicinity of the air-cooled Series R™ condenser. Supply air movement may draw debris into the condenser coil, blocking spaces between coil fins and causing coil starvation.

Special consideration should be given to low ambient units. Condenser coils and fan discharge must be kept free of obstructions to permit adequate airflow for satisfactory unit operation.

b. Provide Vertical Clearance
Vertical condenser air discharge must be unobstructed. While it is difficult to predict the degree of warm air circulation, a unit installed without sufficient, unrestricted vertical space above the condenser fans would have its capacity and efficiency significantly reduced. Performance data is based on free air discharge.

c. Provide Lateral Clearance
The condenser coil inlet must not be obstructed. A unit installed closer than the minimum recommended distance to a wall or other vertical riser may experience a combination coil starvation and warm air recirculation, resulting in unit capacity and efficiency reductions. Once again, the Adaptive Control™ microprocessor will allow the chiller to stay on line, producing the maximum available capacity, even at less than recommended lateral clearances.

The recommended lateral clearances are depicted in the dimensional data section. These are estimates and should be reviewed with the local Trane sales engineer at the jobsite.

d. Provide Unit-to-Unit Clearance
Units should be separated from each other by a sufficient distance to prevent warm air recirculation or coil starvation. The air-cooled Series R™ condenser has the lowest recommended unit-to-unit clearance in the industry, eight feet. Consult the local Trane sales engineer for applications concerning close spacing and restricted airflows.

e. Walled Enclosure Installations
When the unit is placed in an enclosure or small depression, the top of the fans should be no lower than the top of the enclosure or depression. If they are, consideration should be given to ducting the top of the unit. Ducting individual fans, however, is not recommended. Such applications should always be reviewed with the local Trane sales engineer.

Model Number Description

RTWA and RTUA unit model number description

Digits 1,2 — Unit Model
RT = Rotary Chiller

Digit 3 — Unit Type
W = Water-cooled packaged chiller
U = Compressor-chiller

Digit 4 — Development Sequence
A = First

Digit 5,6,7 — Nominal Capacity
070 = 70 Tons
080 = 80 Tons
090 = 90 Tons
100 = 100 Tons
110 = 110 Tons
125 = 125 Tons

Digit 8 — Unit Voltage
A = 200/60/3
C = 230/60/3
D = 380/60/3
K = 400/50/3
4 = 460/60/3
5 = 575/60/3
S = Special Customer Option

Digit 9 — Compressor Start Type
Y = Y-Delta Closed Transition
X = X-Line (Across the Line)
S = Special

Digit 10,11 — Design Sequence
** = (Factory Input)

Digit 12 — Evaporator Leaving Temperature
1 = Standard (40 - 65 F)
2 = Low temp process (0-39 F)
3 = Standard temp Ice making (20 - 65 F)
4 = Low temp icemaking (0-39 F)

Digit 13 — Condenser Configuration
C = Standard Efficiency
D = High Efficiency Condenser
E = Standard Efficiency, high temp
F = High Efficiency Condenser, high temp
R = Remote Air-Cooled Condenser
S = Special

Digit 14 — Agency Listing
0 = No Agency Listing
3 = C/UL Listed
4 = China Pressure Vessel Code
5 = China Pressure Vessel Code & C/UL Listed

Digit 15 — Control Interface
C = Deluxe without communication
D = Deluxe with communication
L = LonTalk Communication

Digit 16 — Chilled Water Reset
0 = No chilled water reset
1 = Based on return water temperature
2 = Based on outside air temperature

Digit 17 — Compressor Type (Factory Assigned)
V = High volume or pressure ratio
W = Low volume or pressure ratio
High Vi = If Digit 12 is 2 or if Digit 13 is E or F.
Low Vi = If Digit 12 is 1 or 3 and Digit 13 is C or D.

Digit 18+ — Factory Installed or Factory Supplied Options
D = Low ambient lockout sensor [1]
F = Power disconnect
Q = Rubber-in-shear isolators
R = Remote display
T = Condenser water temperature sensors[2]
H = Unit sound attenuator
Y = Condenser refrigerant sensors [3]

Digits 18+ may be multiple independent add on options.

Notes:
1) Either RTCA or non-RTCA condensers
2) RTWA only
3) Use only with RTUA and non-RTCA condensers

RTCA unit model number description

Digits 1,2 — Unit Model
RT = Rotary Chiller

Digit 3 — Unit Type
C = Air Cooled Condenser

Digit 4 — Development Sequence
A = First Sequence

Digit 5, 6 & 7 — Nominal Capacity
070 = 70 tons
080 = 80 tons
090 = 90 tons
100 = 100 tons
110 = 110 tons
125 = 125 tons

Digit 8 — Unit Voltage
A = 200/60/3
C = 230/60/3
D = 380/60/3
4 = 460/60/3
5 = 575/60/3
S = Special

Digit 9 — Compressor Starter Type
Y = Y-Delta Closed Transition
X = X-Line (Across the Line)
S = Special
* = Not Applicable

Digit 10, 11 — Design Sequence
** = Factory Input

Digit 12 — Evaporator Leaving Temperature
1 = Standard temp (40 - 65 F)
2 = Low temp process (0 - 39 F)
3 = Ice-Making process(20 - 65 F)
S = Special
* = Not Applicable

Digit 13 — Condenser Coil Fin Material
A = Aluminum
S = Special

Digit 14 — Agency Listing
0 = No Agency Listing
1 = C/UL Listing

Digit 15 — Control Interface
C = Deluxe without Communication
D = Deluxe with Communication
* = Not Applicable

Digit 16 — Chilled Water Reset
0 = No Chilled Water Reset
1 = Based on Return Water Temperature
2 = Based on Outside Air Temperature
* = Not Applicable

Digit 17 — Miscellaneous Factory Installed Options
A = Architectural Louvered Panels
D = Low Ambient Lockout Sensor
G = Low Ambient Operation
K = Coil Protection
M = Access Guard

Field Installed Options
Q = Spring Isolators
N = Neoprene Isolators
8 = Architectural Louvered Panels
9 = Coil Protection
0 = Access Guard

General Data

Table G-1 — General Data — RTWA 70-125

Size		70 Standard	70 Long	80 Standard	80 Long	90 Standard	90 Long	100 Standard	100 Long	110 Standard	110 Long	125 Standard	125 Long
Compressor													
Nominal Tons (1)		35/35	35/35	40/40	40/40	50/40	50/40	50/50	50/50	60/50	60/50	60/60	60/60
Quantity		2	2	2	2	2	2	2	2	2	2	2	2
Evaporator													
Water Storage	(Gallons)	39.8	39.8	37.8	37.8	35.0	35.0	32.1	32.1	51.8	51.8	47.6	47.6
	(Liters)	150.8	150.8	143.3	143.3	132.7	132.7	121.7	121.7	196.3	196.3	180.4	180.4
Minimum Flow	(GPM)	84	84	96	96	108	108	120	120	132	132	150	150
	(L/S)	5.3	5.3	6.1	6.1	6.8	6.8	7.6	7.6	8.3	8.3	9.5	9.5
Maximum Flow	(GPM)	252	252	288	288	324	324	360	360	396	396	450	450
	(L/S)	15.9	15.9	18.2	18.2	20.5	20.5	22.7	22.7	25.0	25.0	28.4	28.4
Condenser													
Water Storage	(Gallons)	9.0	11.8	9.9	13.0	10.9	14.7	11.8	16.4	12.6	17.5	13.4	18.5
	(Liters)	34.1	44.7	37.5	49.3	41.3	55.7	44.7	62.2	47.8	66.3	50.8	70.1
Minimum Flow	(GPM)	75	90	90	105	120	145	120	145	145	170	145	170
	(L/S)	4.7	5.7	5.7	6.6	7.6	9.2	7.6	9.2	9.2	10.7	9.2	10.7
Maximum Flow	(GPM)	275	325	325	375	325	375	440	525	440	525	525	615
	(L/S)	17.4	20.5	20.5	23.7	20.5	23.7	27.8	33.1	27.8	33.1	33.1	38.8
General													
Refrigerant Type		HCFC-22	HCFC-22	HCFC-22	HCFC-22	HCFC-22	HCFC-22	HCFC-22	HCFC-22	HCFC-22	HCFC-22	HCFC-22	HCFC-22
% Min. Load (3)		15	15	15	15	15	15	15	15	15	15	15	15
Refrigerant Charge (1)	(Lb)	64/64	85/85	64/64	85/85	72/64	95/85	72/72	95/95	72/72	95/95	72/72	95/95
	(Kg)	29.1/29.1	38.6/38.6	29.1/29.1	38.6/38.6	33.4/29.1	43.1/38.6	32.7/32.7	43.1/43.1	32.7/32.7	43.1/43.1	32.7/32.7	43.1/43.1
Oil Charge	(Quarts)	12/12	12/12	12/12	12/12	12/12	12/12	12/12	12/12	12/12	12/12	12/12	12/12
	(Liters)	11.4/11.4	11.4/11.4	11.4/11.4	11.4/11.4	11.4/11.4	11.4/11.4	11.4/11.4	11.4/11.4	11.4/11.4	11.4/11.4	11.4/11.4	11.4/11.4
Operating Weight (2)	(lbs)	4815	4978	4847	5018	4971	5173	5108	5340	5476	5715	5546	5792
	(kg)	2234	2258	2199	2277	2254	2346	2317	2422	2484	2592	2516	2627
Shipping Weight (2)	(lbs)	4485	4648	4531	4702	4685	4887	4839	5071	5044	5283	5114	5360
	(kg)	2084	2108	2055	2133	2125	2217	2195	2300	2288	2396	2320	2431
Overall Dimensions	(in.)												
Length		99	112	99	112	103	112	102	112	132	132	132	132
Width		34	34	34	34	34	34	34	34	34	34	34	34
Height		72	72	72	72	72	72	72	72	72	72	72	72
Overall Dimensions	(mm)												
Length		2515	2835	2515	2835	2607	2848	2607	2848	3340	3340	3340	3340
Width		864	864	864	864	864	864	864	864	864	864	864	864
Height		1822	1822	1822	1822	1822	1822	1822	1822	1822	1822	1822	1822

Notes:
1. Data containing information on two circuits shown as follows: ckt1/ckt2.
2. All weights include Y-Delta starters.
3. Percent minimum load is for total machine, not each individual circuit.

General Data

Table G-2 — General Data — RTUA 70-125 Ton

Size		70	80	90	100	110	125
Compressor							
Nominal Tons (1)		35/35	40/40	50/40	50/50	60/50	60/60
Quantity		2	2	2	2	2	2
Evaporator							
Water Storage	(Gallons)	39.8	37.8	35.0	32.1	51.8	47.6
	(Liters)	150.8	143.3	132.7	121.7	196.3	180.4
Minimum Flow	(GPM)	84.0	96.0	108.0	120.0	132.0	150.0
	(L/S)	5.3	6.1	6.8	7.6	8.3	9.5
Maximum Flow	(GPM)	252.0	288.0	324.0	360.0	396.0	450.0
	(L/S)	15.9	18.2	20.5	22.7	25.0	28.4
General							
Refrigerant Type		HCFC-22	HCFC-22	HCFC-22	HCFC-22	HCFC-22	HCFC-22
% Min. Load (3)		15	15	15	15	15	15
Oil Charge	(Quarts)	12/12	12/12	12/12	12/12	12/12	12/12
	(Liters)	11.4/11.4	11.4/11.4	11.4/11.4	11.4/11.4	11.4/11.4	11.4/11.4
Operating Weight (2)	(lbs)	3804	3816	3895	3970	4149	4149
	(kg)	1725	1731	1766.8	1801	1882	1882
Shipping Weight (2)	(lbs)	3474	3500	3609	3701	3717	3717
	(kg)	1576	1588	1637	1679	1686	1686
Overall Dimensions	(In.)						
Length		99.0	99.0	102.6	102.6	131.5	131.5
Width		34.0	34.0	34.0	34.0	34.0	34.0
Height		71.8	71.8	71.8	71.8	71.8	71.8
Overall Dimensions	(mm)						
Length		2515	2515	2607	2607	3340	3340
Width		864	864	864	864	864	864
Height		1822	1822	1822	1822	1822	1822

Notes:
1. Data containing information on two circuits shown as follows: ckt1/ckt2.
2. All weights include Y-delta starters.
3. Percent minimum load is for total machine, not each individual circuit.

Table G-3 — General Data — RTCA 70-125 Ton

Size		70	80	90	100	110	125
Condenser							
Qty of Coils		4	4	4	4	4	4
Fins/Foot		192	192	192	192	192	192
Coil Length (1)	(In.)	156/156	156/156	168/156	168/168	204/168	204/204
Coil Height	(In.)	42	42	42	42	42	42
Number of Rows		2	2	2	2	2	2
Condenser Fans							
Quantity (1)		4/4	4/4	5/4	5/5	5/5	5/5
Diameter	(In.)	30	30	30	30	30	30
Total Airflow	(CFM)	71750	71750	77640	83530	87505	91480
Nominal RPM		850	850	850	850	850	850
Tip Speed	(Ft/Min.)	6675	6675	6675	6675	6675	6675
Motor HP	(Ea)	1.1	1.1	1.1	1.1	1.1	1.1
Min Starting/Oper Ambient (2)							
Std Unit	(Deg F)	25	25	25	25	25	25
Std Unit	(Deg C)	-3.8	-3.8	-3.8	-3.8	-3.8	-3.8
Low Ambient	(Deg F)	-10	-10	-10	-10	-10	-10
Low Ambient	(Deg C)	-23.3	-23.3	-23.3	-23.3	-23.3	-23.3
Weights (4)							
Operating Wt.	(lbs.)	4343	4368	4451	4577	4850	4995
Operating Wt.	(kg.)	1970	1981	2019	2076	2200	2266
Shipping Wt.	(lbs.)	4262	4287	4357	4475	4730	4858
Shipping Wt.	(kg.)	1933	1945	1976	2030	2146	2204
Overall Dimensions	(In.)						
Length		204	204	204	204	231	231
Width		85	85	85	85	85	85
Height		88	88	88	88	88	88
Overall Dimensions	(mm)						
Length		5176	5176	5176	5176	5861	5861
Width		2240	2240	2240	2240	2240	2240
Height		2223	2223	2223	2223	2223	2223

Notes:
1. Data containing information on two circuits shown as follows: ckt1/ckt2.
2. Minimum start-up/operating ambient based on a 5 mph wind across the condenser.
3. Percent minimum load is for total machine, not each individual circuit.
4. Deduct 493 lbs. (70-100 ton) or 620 lbs. (110-125 ton) for units without architectural louvered panels.

Selection Procedure

RTWA

The 70-125 ton water-cooled Series R® chiller and compressor chiller performance is rated in accordance with ARI Standard 550/590-98 Certification Program. The 70-125 ton water-cooled chiller product line provides numerous individual unit selections over a capacity range of 70-125 tons.

Performance
The performance examples, on the following pages provide performance information at various tonnages, including capacity in tons, efficiency and water pressure drops. All capacities are net tons and are based on fouling factors of 0.00010 for the evaporator and 0.00025 for the condenser (RTWA) watersides. Unit performance at nonstandard fouling factors may vary from standard performance. See Table PAF-3 for fouling factor adjustments.

Dimensional Drawings
The dimensional drawings illustrate overall measurements of the unit. The recommended service clearances indicate clearances required to easily service the 70-125 ton water-cooled chiller and compressor chiller. All catalog dimensional drawings are subject to change. Current submittal drawings should be referred to for detailed dimensional information. Contact the local Trane sales office for submittal and template information.

Electrical Data Tables
Electrical data is shown in the data section of the appropriate chiller family. A voltage utilization range is tabulated for each voltage listed. The 70-125 ton Series R compressor motors are designed to operate satisfactorily over a utilization range of ± 10 percent of the standard nominal voltages.

To properly size field electrical wiring, the electrical engineer or contractor on a project needs to know the minimum circuit ampacity (MCA) of the 70-125 ton Series R chillers. The National Electrical Code (NEC), Article 440-33, defines the method of calculating the minimum circuit ampacity. These values have been calculated and are provided in the electrical data tables.

General Data Tables
General unit data is shown in the data section. General unit information includes refrigerant charge (RTWA only), oil charge, shipping weight and operating weight. Also evaporator and condenser data, including water storage capacities, and minimum and maximum flow limits. If the maximum flow limit is exceeded, tube erosion may result. Flow rates less than the specified minimum result in laminar flow with a reduction in performance, as well as potential for increased fouling and corrosion.

Evaporator and Condenser Pressure Drop Curves
Located in the data section, pressure drop data is provided for both evaporators and condensers (RTWA only).

Part Load Performance
The 70-125 ton water-cooled Series R chiller and compressor chillers possess excellent part load performance characteristics. Air conditioning system loads usually are significantly less than full load design conditions. Therefore, the chillers seldom operate at full load.

The 70-125 ton Series R chillers can provide significant operating savings. Part load chiller operation is normally associated with reduced condenser water temperatures (RTWA only) and reduced ambient temperatures (RTUA only). At part load operation, the heat rejected to the cooling tower is less than at full load operation. Also, part load operation is typically associated with reduced outside wet bulb temperatures, resulting in improved cooling tower performance (RTWA). Part load operation associated with reduced ambient temperatures results in improved compressor chiller performance (RTUA).

Integrated Part Load Performance
The Integrated Part Load Value (IPLV) is a method of measuring total chiller performance over a defined range of part load conditions. This method was established by ARI and is included in the ARI Standard 550/590. IPLV serves as a good method of comparing the part load efficiency of various chillers on an equal basis. The formula for calculating IPLV is defined as:

IPLV = .01A + .42B + .45C + .12D

Where:
A = EER at 100% load point
B = EER at 75% load point
C = EER at 50% load point
D = EER at 25% load point

To approximate total energy requirements over a period of time, use of a computerized load and performance program that considers air conditioning load, machine performance, cooling tower performance (RTWA), outside wet bulb temperature and ambient temperature (RTUA) is suggested. Contact the local Trane sales office for more information on these computerized programs.

Selection Procedure

RTWA

The chiller capacity tables presented in this catalog cover the most frequently encountered leaving water temperatures. The tables reflect a 10 F (5.6 C) temperature drop through the evaporator. For temperature drops other than 10 F (5.6 C), refer to Table PAF-3, and apply the appropriate Performance Data Adjustment Factors. For chilled brine selections, refer to Figures PAF-1 and PAF-2 for Ethylene Glycol and Propylene Glycol Adjustment Factors.

For example:

Corrected Capacity = Capacity (unadjusted) x Glycol Capacity Adjustment Factor

Corrected Flow Rate = Flow Rate (unadjusted) x Glycol Flow Rate Adjustment Factor

To select a Trane water-cooled Series R® chiller, the following information is required:

1
Design load in tons of refrigeration

2
Design chilled water temperature drop or GPM

3
Design leaving chilled water temperature

4
Design entering condenser water temperature

Evaporator flow rates can be determined by using the following formulas:

$$GPM = \frac{\text{Tons} \times 24}{\text{Temperature Drop (Degrees F)}}$$

or

$$L/S = \frac{\text{kW (Capacity)} \times .239}{\text{Temperature Drop (Degrees C)}}$$

NOTE: Flow rates must fall within the limits specified in Tables G-1 or G-2 (for GPM or for L/S).

Evaporator pressure drops can be obtained from Figure P-1.

Condenser flow rates can be determined by using the following formulas:

$$GPM = \frac{24 \times (\text{Tons} + (.285 \times \text{Compressor kW}))}{\text{Condenser Water Temperature Drop}}$$

or

$$L/S = \frac{1.5 \times (\text{Tons} + \text{Compressor kW}))}{\text{Condenser Water Temp. Drop (°C)}}$$

Condenser pressure drops can be obtained from Figures P-2 and P-3.

Selection Example
Given:

Required System Load = 73.5 Tons

Leaving Chilled Water Temperature (LCWT) = 44 F

Temperature Drop = 10 F Design (Both evap and condenser)

Entering Condenser Water = 85 F

Evaporator Fouling Factor = 0.00010

1
From Table P-1 (RTWA 60 Hz standard performance data), an RTWA 70 at the given conditions will produce 73.7 tons with a compressor power input of 62.8 kW and a unit EER of 14.0.

2
To calculate the required chilled water flow rate we use the formula given below:

$$GPM = \frac{73.7 \times 24}{10\ F} = 177\ GPM$$

To calculate the required condenser water flow rate we use the formula given below:

$$GPM = \frac{24 \times (\text{tons} + (.285 \times \text{compressor kW}))}{\text{Condenser water temperature drop}}$$

= 220

3
To determine the evaporator pressure drop we use the flow rate (GPM) and the evaporator water pressure drop curves, Figure P-1. Entering the curve at 177 GPM, the pressure drop for a nominal 70 ton evaporator is 15 feet.

To determine the condenser pressure drop we use the flow rate (GPM) and the condenser water pressure drop curves, Figure P-2 and P-3. For a standard length condenser, enter the curve (in Figure P-3) at 220 GPM, the pressure drop for a nominal 70 ton standard length condenser is 16.5 feet.

4
For selections where the temperature drop is different than 10 F, the performance adjustment factors shown in Table PAF-3 should be applied at this point.

5
The final unit selection is:

QTY (1) RTWA 70 Standard

Cooling Capacity = 73.7 tons*

Entering/Leaving Chilled Water Temperatures = 54/44 F

Chilled Water Flow Rate = 177 GPM

Evaporator Water Pressure Drop = 15 Feet

Entering/Leaving Condenser Water Temperatures = 85/95

Condenser Water Flow Rate = 220 GPM

Condenser Water Pressure Drop = 16.5 Feet

Compressor Power Input = 62.8 kW

Unit EER = 14.0

Minimum Leaving Chilled Water Temperature Setpoint
The minimum leaving chilled water temperature setpoint for water is 40 degree F. For those applications requiring 0-39 degree F fluid setpoints, a glycol solution must be used. Contact the local Trane Sales Engineer for additional information.

Note: Use same procedure for RTUA compressor chillers; exclude condenser portion.

Selection Procedure RTUA

RTUA with matching condenser
Performance given in Tables P-10 through P-14 can be used to select an RTUA with the matching nominal sized RTCA air-cooled condenser.

RTUA with no cataloged condenser
The following selection process is applicable when matching an RTUA with a non-RTCA condenser. When selecting a combination of equipment or conditions which are not cataloged, it becomes necessary to match the compressor and condenser performance. The following procedure can be used in selecting the correct condenser.

Example:

Given:
1
Total cooling load = 78 tons (936 MBh)
2
Leaving Chiller Water = 45 F
3
Design air temperature entering coil = 95 F
4
Altitude = sea level
5
Refrigerant = HCFC 22

Select a compressor-chiller/condenser combination to satisfy design requirements (assuming component performance is not cataloged).

The procedure is outlined as follows:

Step 1: Select a compressor-chiller that appears to meet tonnage requirements.

- Select RTUA 80 (2-40 ton circuits)

Step 2: Plot at least two gross compressor-chiller capacities, less subcooling at the design leaving water temperature, and different condensing temperatures as shown on Chart S-1.

- From performance data, the following points are plotted for RTUA 80:
  To subtract capacity increase due to subcooling reduce catalog capacity by five percent (for every 10 F of subcooling).

Leaving Water Temp.	Cond Temp.	MBh w/Subclg.	Deg Subclg.	MBh Less Subclg
45 F	115	981	10 F	932
45 F	135	865	10 F	821

Step 3a: Select a condenser that appears to meet the tonnage requirements.

- Select CAUC-C80 (upflow air-cooled condenser)

Step 3b: Plot two gross heat rejection points (ACDS-DS-1) divided by the appropriate N value (Table 13-1).

By selecting points at 25 F and 35 F initial temperature different (ITD = condensing temp. - ambient temp.), the following table is constructed

Cond. ITD	Cond. Temp.	Gross Heat Rejection MBh
25 F	120	950
35 F	130	1350

Divide gross heat rejection by the appropriate N value to get net capacity. (See table below.)

Leaving Water Temp.	Cond. Temp.	N	GHP/N in MBh
45 F	120 F	1.24	766
45 F	130 F	1.29	1047

Resultant capacity is 875 at a condensing temperature of 124 F.

Step 4: In ACDS-DS-1 enter Chart 9-1 at the appropriate condensing temperature and ambient temperature to determine increase in capacity due to subcooling.

Percent increase in capacity due to subcooling for an ambient temperature of 95 F and a condensing temperature of 124 F is 9.5%.

875 * 1.0975 = 960 MBh

Step 5: From Figures P-4 to P-11, determine kW of compressor-condenser at condensing temperatures of 124 F.
MBh = 960
kW = 86

Values Of "N" (RTUA)

Cond. Temp. (F)	Leaving Chilled Water Temperature (F) 40	45	50
85	1.14	1.12	1.10
95	1.16	1.14	1.13
105	1.19	1.17	1.15
115	1.24	1.21	1.18
125	1.19	1.26	1.22
135	1.36	1.32	1.28
145	1.46	1.39	1.35

Chart S-1 — Compressor-Chiller/Condenser Performance

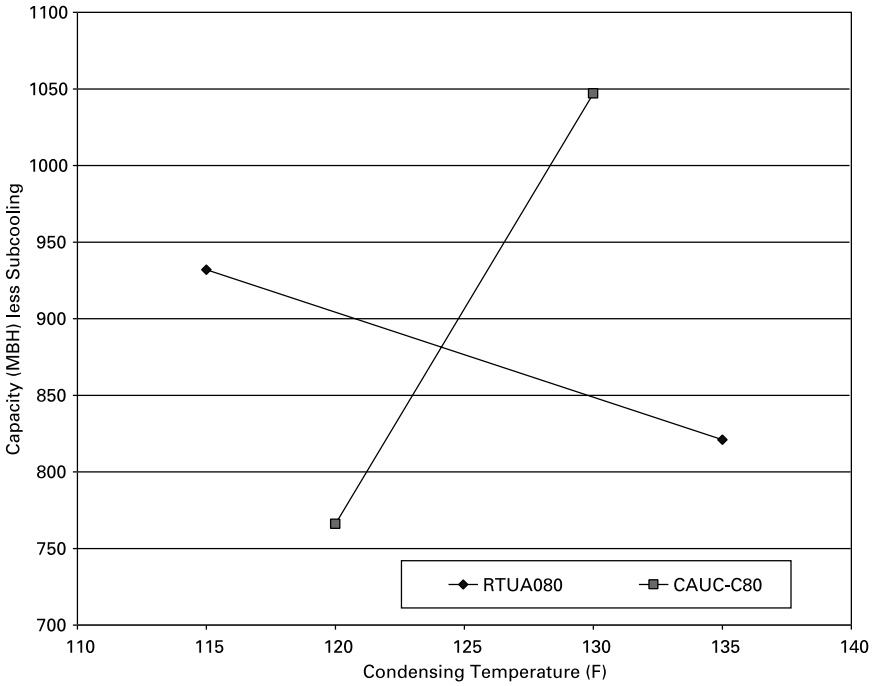

Performance Adjustment Factors

Table PAF-1 — Pressure Drop Correction Factor

Fluid	% Ethylene Glycol					
Temp. F	0	10	20	30	40	50
0	NA	NA	NA	NA	1.50	1.60
10	NA	NA	NA	1.38	1.46	1.55
20	NA	NA	1.26	1.34	1.42	1.51
30	NA	1.15	1.22	1.30	1.38	1.47
40	1.00	1.12	1.19	1.26	1.34	1.42
50	1.00	1.09	1.16	1.23	1.31	1.39
60	1.00	1.05	1.09	1.12	1.16	1.21

Table PAF-2 — Pressure Drop Correction Factor

Fluid	% Propylene Glycol					
Temp. F	0	10	20	30	40	50
0	NA	NA	NA	NA	1.63	1.90
10	NA	NA	NA	1.42	1.55	1.74
20	NA	NA	1.24	1.34	1.46	1.62
30	NA	1.11	1.19	1.28	1.39	1.53
40	1.00	1.07	1.15	1.23	1.33	1.45
50	1.00	1.04	1.11	1.19	1.28	1.39
60	1.00	1.00	1.03	1.08	1.13	1.20

Table PAF-3 – Performance Data Adjustment Factors

Fouling	Chilled Water	Altitude											
		Sea Level			2000 Feet			4000 Feet			6000 Feet		
Factor	Temp. Drop	CAP	GPM	kW	CAP	GPM	kW	CAP	GPM	kW	CAP	GPM	kW
	8	1.000	1.249	1.000	0.996	1.245	1.004	0.991	1.240	1.007	0.987	1.234	1.014
0.00010	10	1.000	1.000	1.000	0.997	0.996	1.004	0.993	0.992	1.007	0.988	0.988	1.015
	12	1.001	0.835	1.001	0.997	0.832	1.004	0.993	0.828	1.009	0.988	0.824	1.015
	14	1.003	0.716	1.001	0.999	0.714	1.004	0.994	0.711	1.009	0.990	0.708	1.015
	16	1.004	0.628	1.001	1.000	0.626	1.005	0.997	0.623	1.009	0.991	0.620	1.016
	8	0.988	1.235	0.996	0.984	1.230	1.000	0.980	1.225	1.004	0.975	1.220	1.010
0.00025	10	0.988	0.989	0.998	0.986	0.985	1.000	0.981	0.981	1.004	0.977	0.976	1.011
	12	0.990	0.825	0.998	0.987	0.822	1.000	0.983	0.819	1.005	0.978	0.815	1.011
	14	0.991	0.708	0.998	0.988	0.706	1.001	0.984	0.703	1.005	0.980	0.700	1.011
	16	0.993	0.621	0.999	0.990	0.619	1.001	0.986	0.617	1.006	0.981	0.614	1.012

Performance Adjustment Factors

Figure PAF-1 — Ethylene Glycol Performance Factors

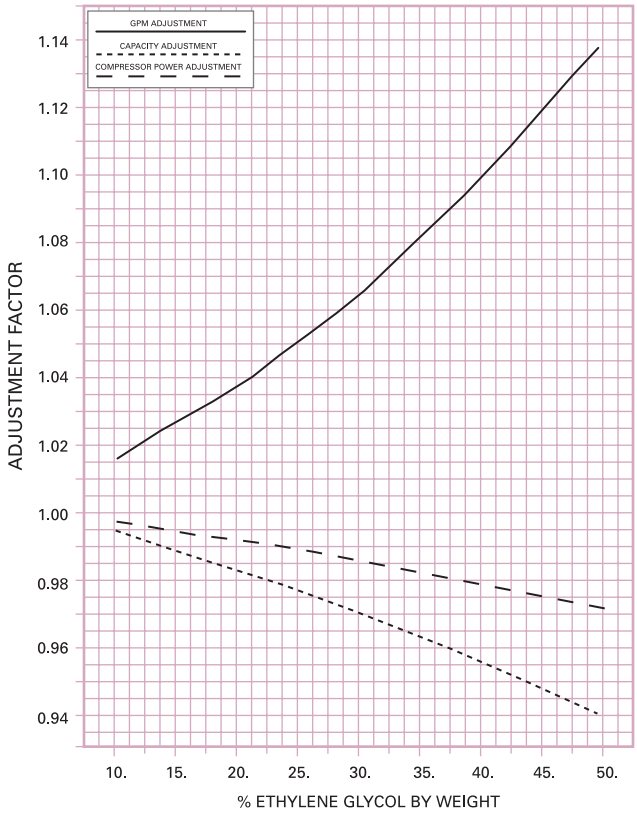

Figure PAF-2 — Propylene Glycol Performance Factors

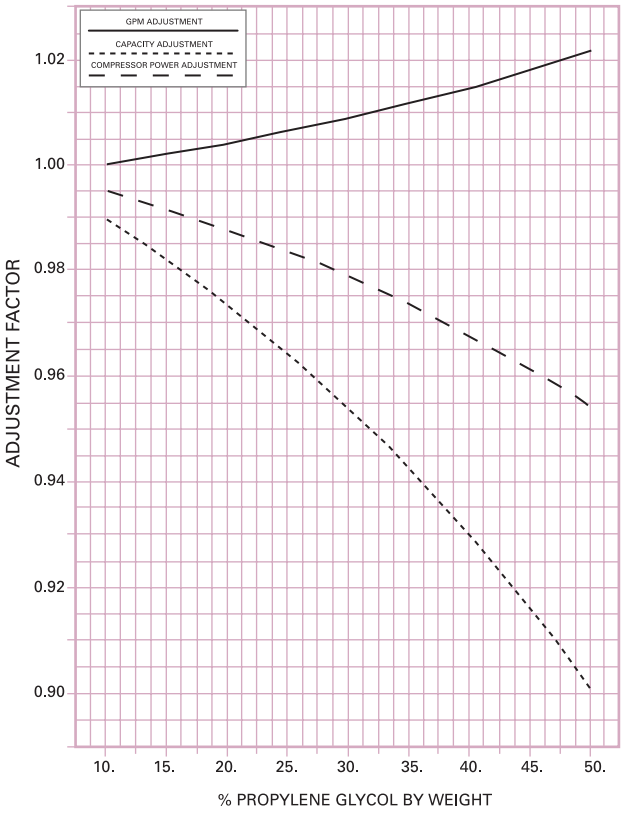

Performance Data

RTWA

Table P-1. 60 Hz standard efficiency chillers in English units

		Condenser Entering Water Temperature (F)								
		75			85			95		
Evaporator Leaving Water Temperature (F)	Unit Size	Tons	kW input	EER	Tons	kW input	EER	Tons	kW input	EER
40	70	72.4	55.2	15.7	68.6	62.0	13.2	64.4	69.7	11.1
	80	83.2	61.7	16.1	79.1	69.4	13.6	74.4	78.4	11.4
	90	96.1	71.7	16.0	91.4	80.1	13.7	86.2	89.7	11.5
	100	108.2	81.5	15.9	103.0	90.3	13.6	97.3	100.4	11.6
	110	116.3	88.3	15.8	110.8	97.9	13.5	104.6	108.9	11.5
	125	126.2	95.4	15.8	120.2	105.7	13.6	113.5	117.5	11.6
42	70	75.0	55.6	16.1	71.1	62.4	13.6	66.8	70.0	11.4
	80	86.3	62.0	16.6	82.0	69.8	14.0	77.2	78.9	11.7
	90	99.6	72.3	16.5	94.7	80.6	14.1	89.3	90.2	11.8
	100	112.0	82.2	16.3	106.6	91.0	14.0	100.7	101.0	11.9
	110	120.4	89.1	16.2	114.7	98.6	13.9	108.4	109.5	11.9
	125	130.7	96.3	16.2	124.5	106.5	14.0	117.6	118.2	11.9
44	70	77.7	56.0	16.6	73.7	62.8	14.0	69.1	70.4	11.7
	80	89.5	62.4	17.1	85.0	70.2	14.5	80.0	79.3	12.1
	90	103.1	72.9	16.9	98.1	81.1	14.5	92.5	90.7	12.2
	100	115.9	82.9	16.7	110.4	91.6	14.4	104.3	101.6	12.3
	110	124.6	89.9	16.6	118.7	99.3	14.3	112.2	110.2	12.2
	125	135.3	97.1	16.7	128.9	107.2	14.4	121.8	118.9	12.3
46	70	80.4	56.4	17.0	76.2	63.2	14.4	71.6	70.8	12.1
	80	92.7	62.8	17.6	88.0	70.6	14.9	82.8	79.8	12.4
	90	106.7	73.4	17.4	101.5	81.7	14.9	95.7	91.3	12.5
	100	119.9	83.7	17.1	114.2	92.3	14.8	107.9	102.2	12.6
	110	128.9	90.7	17.0	122.9	100.0	14.7	116.2	110.8	12.5
	125	139.9	98.0	17.1	133.3	108.0	14.8	126.1	119.6	12.6
48	70	83.2	56.8	17.5	78.8	63.6	14.8	74.0	71.2	12.4
	80	95.9	63.2	18.2	91.1	71.1	15.3	85.7	80.3	12.8
	90	110.3	74.2	17.8	105.0	82.3	15.3	99.1	91.9	12.9
	100	123.9	84.5	17.5	118.1	93.0	15.2	111.6	102.9	13.0
	110	133.3	91.6	17.4	127.0	100.8	15.1	120.2	111.5	12.9
	125	144.7	99.0	17.5	137.9	108.9	15.2	130.4	120.4	13.0
50	70	85.9	57.2	18.0	81.4	63.9	15.2	76.5	71.5	12.8
	80	99.2	63.6	18.7	94.2	71.6	15.7	88.7	80.8	13.1
	90	113.9	75.0	18.2	108.5	82.9	15.7	102.5	92.5	13.3
	100	128.1	85.3	18.0	122.0	93.7	15.6	115.4	103.5	13.3
	110	137.8	92.5	17.8	131.3	101.6	15.5	124.3	112.3	13.3
	125	149.6	99.9	17.9	142.6	109.7	15.6	134.9	121.2	13.3

Notes:
1. Ratings based on evaporator fouling factor of 0.00010 hr-sq. ft.-°F/Btu and condenser fouling factor of 0.00025 hr-sq. ft.-°F/Btu.
2. Consult Trane representative for performance at temperatures outside of the ranges shown.
3. kW input is for compressors only.
4. EER = Energy Efficiency Ratio (Btu/watt-hour). Power inputs include compressors and control power.
5. Rated in accordance with ARI Standard 550/590, based on an evaporator temperature drop of 10°F and 3 GPM/ton on the condenser.
6. Interpolation between points is permissible. Extrapolation is not permitted.

Performance Data

RTWA

Table P-2. 60 Hz high efficiency chillers in English units

		Condenser Entering Water Temperature (F)								
		75			85			95		
Evaporator Leaving Water Temperature (F)	Unit Size	Tons	kW input	EER	Tons	kW input	EER	Tons	kW input	EER
40	70.0	73.7	52.1	16.9	70.1	58.7	14.3	66.0	66.0	12.0
	80.0	84.6	58.6	17.2	80.6	65.9	14.6	76.1	74.5	12.2
	90.0	97.7	68.5	17.0	93.2	76.4	14.6	88.1	85.6	12.3
	100.0	109.9	78.3	16.8	104.9	86.7	14.5	99.4	96.4	12.3
	110.0	118.1	84.9	16.6	112.8	94.1	14.3	106.9	104.6	12.2
	125.0	128.1	91.9	16.7	122.3	101.7	14.4	115.9	113.0	12.3
42	70.0	76.4	52.5	17.4	72.7	59.0	14.7	68.5	66.3	12.3
	80.0	87.7	58.9	17.8	83.6	66.2	15.1	79.0	74.8	12.6
	90.0	101.2	69.0	17.5	96.5	76.9	15.0	91.3	86.0	12.7
	100.0	113.8	79.0	17.2	108.7	87.3	14.9	103.0	96.9	12.7
	110.0	122.3	85.7	17.1	116.8	94.8	14.8	110.7	105.2	12.6
	125.0	132.7	92.7	17.1	126.7	102.4	14.8	120.1	113.7	12.6
44	70.0	79.1	52.8	17.9	75.3	59.3	15.2	71.0	66.6	12.7
	80.0	91.0	59.2	18.4	86.7	66.5	15.6	81.9	75.2	13.0
	90.0	104.9	69.6	18.0	100.0	77.4	15.5	94.6	86.5	13.1
	100.0	117.8	79.7	17.7	112.5	87.9	15.3	106.6	97.4	13.1
	110.0	126.6	86.5	17.5	121.0	95.4	15.2	114.7	105.8	13.0
	125.0	137.4	93.6	17.6	131.2	103.2	15.2	124.4	114.3	13.0
46	70.0	81.9	53.1	18.4	78.0	59.6	15.6	73.5	66.9	13.1
	80.0	94.3	59.5	18.9	89.8	66.9	16.1	84.8	75.5	13.4
	90.0	108.6	70.1	18.5	103.5	77.9	15.9	98.0	87.0	13.5
	100.0	121.9	80.4	18.1	116.4	88.5	15.7	110.4	98.0	13.5
	110.0	131.0	87.3	18.0	125.2	96.1	15.6	118.7	106.4	13.4
	125.0	142.2	94.4	18.0	135.8	103.9	15.6	128.8	115.0	13.4
48	70.0	84.8	53.5	18.9	80.7	59.9	16.1	76.0	67.2	13.5
	80.0	97.7	59.8	19.5	93.0	67.2	16.5	87.8	75.9	13.8
	90.0	112.3	70.6	19.0	107.1	78.4	16.3	101.4	87.5	13.9
	100.0	126.0	81.2	18.6	120.4	89.2	16.2	114.2	98.6	13.9
	110.0	135.5	88.1	18.4	129.5	96.8	16.0	122.8	107.0	13.7
	125.0	147.1	95.4	18.5	140.5	104.7	16.1	133.3	115.7	13.8
50	70.0	87.7	53.8	19.4	83.4	60.3	16.5	78.6	67.5	13.9
	80.0	101.1	60.1	20.1	96.2	67.6	17.0	90.9	76.3	14.2
	90.0	116.2	71.2	19.5	110.8	78.9	16.8	104.9	88.0	14.3
	100.0	130.3	82.0	19.0	124.5	89.8	16.6	118.1	99.2	14.3
	110.0	140.1	89.0	18.8	133.9	97.6	16.4	127.1	107.7	14.1
	125.0	152.1	96.3	18.9	145.3	105.5	16.5	137.9	116.4	14.2

Notes:
1. Ratings based on evaporator fouling factor of 0.00010 hr-sq. ft.-°F/Btu and condenser fouling factor of 0.00025 hr-sq. ft.-°F/Btu.
2. Consult Trane representative for performance at temperatures outside of the ranges shown.
3. kW input is for compressors only.
4. EER = Energy Efficiency Ratio (Btu/watt-hour). Power inputs include compressors and control power.
5. Rated in accordance with ARI Standard 550/590, based on an evaporator temperature drop of 10°F and 3 GPM/ton on the condenser.
6. Interpolation between points is permissible. Extrapolation is not permitted.

Performance Data

Table P-3. 50 Hz standard efficiency chillers in English units

		Condenser Entering Water Temperature (F)								
		75			85			95		
Evaporator Leaving Water Temperature (F)	Unit Size	Tons	kW input	EER	Tons	kW input	EER	Tons	kW input	EER
40	70	61.8	45.1	16.4	58.6	50.7	13.8	55.0	57.0	11.5
	80	71.2	50.4	16.9	67.7	56.8	14.2	63.7	64.1	11.9
	90	82.0	58.9	16.7	78.1	65.7	14.2	73.6	73.5	12.0
	100	92.2	67.0	16.4	87.8	74.2	14.2	83.0	82.5	12.0
	110	99.1	72.6	16.3	94.5	80.4	14.0	89.2	89.4	11.9
	125	107.5	78.4	16.4	102.4	86.8	14.1	96.7	96.5	12.0
42	70	64.1	45.4	16.9	60.8	51.0	14.2	57.1	57.3	11.9
	80	73.9	50.7	17.4	70.2	57.0	14.7	66.1	64.5	12.3
	90	85.1	59.3	17.1	80.9	66.1	14.6	76.3	73.9	12.3
	100	95.5	67.6	16.9	91.0	74.7	14.6	86.0	82.9	12.4
	110	102.7	73.3	16.8	97.9	81.0	14.5	92.5	89.9	12.3
	125	111.4	79.1	16.8	106.1	87.4	14.5	100.3	97.0	12.4
44	70	66.4	45.7	17.3	63.0	51.3	14.7	59.1	57.5	12.3
	80	76.7	51.0	18.0	72.8	57.4	15.2	68.5	64.8	12.6
	90	88.1	59.8	17.6	83.8	66.5	15.1	79.1	74.3	12.7
	100	98.9	68.3	17.3	94.2	75.3	15.0	89.1	83.4	12.8
	110	106.3	74.0	17.2	101.4	81.6	14.9	95.8	90.4	12.7
	125	115.3	79.9	17.3	109.9	88.1	14.9	103.9	97.6	12.7
46	70	68.8	46.0	17.8	65.2	51.6	15.1	61.2	57.8	12.7
	80	79.5	51.2	18.5	75.4	57.7	15.6	71.0	65.2	13.0
	90	91.3	60.2	18.1	86.8	67.0	15.5	81.9	74.8	13.1
	100	102.4	68.9	17.8	97.5	75.8	15.4	92.2	83.9	13.1
	110	110.1	74.6	17.6	104.9	82.2	15.3	99.3	91.0	13.1
	125	119.4	80.6	17.7	113.8	88.7	15.3	107.6	98.2	13.1
48	70	71.1	46.3	18.3	67.4	51.9	15.5	63.3	58.1	13.0
	80	82.3	51.5	19.1	78.1	58.0	16.1	73.6	65.6	13.4
	90	94.5	60.7	18.6	89.9	67.4	15.9	84.8	75.2	13.5
	100	105.9	69.5	18.2	100.9	76.4	15.8	95.5	84.5	13.5
	110	113.9	75.4	18.1	108.6	82.8	15.7	102.8	91.5	13.4
	125	123.5	81.4	18.2	117.8	89.4	15.8	111.4	98.8	13.5
50	70	73.6	46.7	18.8	69.7	52.2	16.0	65.5	58.4	13.4
	80	85.2	51.9	19.6	80.9	58.4	16.5	76.2	66.0	13.8
	90	97.7	61.2	19.1	93.0	67.9	16.4	87.8	75.7	13.9
	100	109.5	70.2	18.6	104.4	77.0	16.2	98.8	85.0	13.9
	110	117.8	76.1	18.5	112.3	83.5	16.1	106.3	92.1	13.8
	125	127.8	82.2	18.6	121.8	90.1	16.2	115.3	99.4	13.9

Notes:
1. Ratings based on evaporator fouling factor of 0.00010 hr-sq. ft.-°F/Btu and condenser fouling factor of 0.00025 hr-sq. ft.-°F/Btu.
2. Consult Trane representative for performance at temperatures outside of the ranges shown.
3. kW input is for compressors only.
4. EER = Energy Efficiency Ratio (Btu/watt-hour). Power inputs include compressors and control power.
5. Rated in accordance with ARI Standard 550/590, based on an evaporator temperature drop of 10°F and 3 GPM/ton on the condenser.
6. Interpolation between points is permissible. Extrapolation is not permitted.

Performance Data

RTWA

Table P-4. 50 Hz high efficiency chillers in English units

		Condenser Entering Water Temperature (F)								
		75			85			95		
Evaporator Leaving Water Temperature (F)	Unit Size	Tons	kW input	EER	Tons	kW input	EER	Tons	kW input	EER
40	70	62.8	42.9	17.5	59.7	48.3	14.8	56.2	54.3	12.4
	80	72.2	48.2	17.9	68.8	54.2	15.2	65.0	61.3	12.7
	90	83.2	56.6	17.6	79.4	63.0	15.1	75.1	70.5	12.7
	100	93.5	64.7	17.3	89.3	71.6	14.9	84.6	79.5	12.7
	110	100.4	70.2	17.1	96.0	77.7	14.8	90.9	86.3	12.6
	125	108.9	75.9	17.2	104.0	83.9	14.8	98.5	93.2	12.6
42	70	65.1	43.1	18.0	61.9	48.5	15.2	58.4	54.6	12.8
	80	75.0	48.4	18.5	71.4	54.4	15.7	67.4	61.5	13.1
	90	86.3	57.0	18.1	82.3	63.4	15.5	77.8	70.9	13.1
	100	96.9	65.3	17.7	92.5	72.1	15.3	87.7	80.0	13.1
	110	104.1	70.8	17.6	99.5	78.2	15.2	94.2	86.8	13.0
	125	112.9	76.6	17.6	107.8	84.5	15.3	102.1	93.7	13.0
44	70	67.5	43.4	18.5	64.2	48.8	15.7	60.5	54.8	13.2
	80	77.8	48.6	19.1	74.1	54.7	16.2	70.0	61.8	13.5
	90	89.4	57.4	18.6	85.3	63.8	16.0	80.7	71.3	13.5
	100	100.3	65.9	18.2	95.8	72.6	15.8	90.8	80.4	13.5
	110	107.8	71.5	18.0	103.0	78.8	15.6	97.7	87.3	13.4
	125	116.9	77.3	18.1	111.7	85.1	15.7	105.9	94.3	13.4
46	70	69.9	43.7	19.1	66.5	49.0	16.2	62.7	55.0	13.6
	80	80.7	48.9	19.7	76.8	54.9	16.7	72.5	62.1	14.0
	90	92.7	57.8	19.1	88.4	64.2	16.5	83.6	71.7	14.0
	100	103.9	66.5	18.7	99.2	73.1	16.2	94.1	80.9	13.9
	110	111.7	72.2	18.5	106.7	79.4	16.1	101.2	87.8	13.8
	125	121.1	78.1	18.6	115.7	85.8	16.1	109.7	94.8	13.8
48	70	72.3	44.0	19.6	68.8	49.3	16.7	64.9	55.3	14.0
	80	83.6	49.1	20.3	79.6	55.2	17.2	75.2	62.4	14.4
	90	95.9	58.3	19.7	91.5	64.6	16.9	86.6	72.1	14.4
	100	107.5	67.2	19.1	102.7	73.7	16.7	97.4	81.3	14.3
	110	115.6	72.9	19.0	110.4	79.9	16.5	104.8	88.3	14.2
	125	125.3	78.8	19.0	119.8	86.4	16.6	113.6	95.4	14.3
50	70	74.8	44.3	20.2	71.2	49.5	17.2	67.1	55.5	14.4
	80	86.6	49.3	21.0	82.4	55.5	17.7	77.8	62.7	14.8
	90	99.3	58.8	20.2	94.7	65.1	17.4	89.6	72.5	14.8
	100	111.2	67.8	19.6	106.2	74.2	17.1	100.8	81.8	14.7
	110	119.6	73.6	19.4	114.3	80.6	17.0	108.4	88.8	14.6
	125	129.7	79.6	19.5	123.9	87.1	17.0	117.6	96.0	14.7

Notes:
1. Ratings based on evaporator fouling factor of 0.00010 hr-sq. ft.-°F/Btu and condenser fouling factor of 0.00025 hr-sq. ft.-°F/Btu.
2. Consult Trane representative for performance at temperatures outside of the ranges shown.
3. kW input is for compressors only.
4. EER = Energy Efficiency Ratio (Btu/watt-hour). Power inputs include compressors and control power.
5. Rated in accordance with ARI Standard 550/590, based on an evaporator temperature drop of 10°F and 3 GPM/ton on the condenser.
6. Interpolation between points is permissible. Extrapolation is not permitted.

Performance Data

Table P-5 – ARI part load performance - 60 Hz

Unit Size	% Load	Tons	EER	IPLV
RTWA 70	100	73.5	14.0	
Standard	75	55.1	16.7	**18.1**
Condenser	50	36.8	19.2	
	25	18.4	19.2	
RTWA 70	100	75.3	15.3	
Long	75	56.5	18.0	**19.5**
Condenser	50	37.7	20.8	
	25	18.8	20.6	
RTWA 80	100	84.7	14.4	
Standard	75	63.5	17.3	**18.8**
Condenser	50	42.4	21.0	
	25	21.2	16.0	
RTWA 80	100	86.6	15.6	
Long	75	65.0	18.6	**20.2**
Condenser	50	43.3	22.6	
	25	21.7	16.9	
RTWA 90	100	98.0	14.4	
Standard	75	73.5	17.0	**18.3**
Condenser	50	49.0	19.8	
	25	24.5	17.8	
RTWA 90	100	100.1	15.5	
Long	75	75.1	18.2	**19.4**
Condenser	50	50.1	21.0	
	25	25.0	18.1	
RTWA 100	100	110.3	14.4	
Standard	75	82.7	16.7	**18.0**
Condenser	50	55.2	19.4	
	25	27.6	18.0	
RTWA 100	100	112.6	15.4	
Long	75	84.5	17.8	**19.1**
Condenser	50	56.3	20.5	
	25	28.2	18.8	
RTWA 110	100	118.4	14.3	
Standard	75	88.8	16.5	**18.0**
Condenser	50	59.2	19.4	
	25	29.6	17.9	
RTWA 110	100	120.8	15.2	
Long	75	90.6	17.5	**19.0**
Condenser	50	60.4	20.5	
	25	30.2	18.8	
RTWA125	100	128.5	14.3	
Standard	75	96.4	16.3	**17.7**
Condenser	50	64.3	19.3	
	25	32.1	16.5	
RTWA125	100	131.0	15.3	
Long	75	98.3	17.6	**18.6**
Condenser	50	65.5	20.3	
	25	32.8	16.2	

Notes:
1. IPLV values are rated in accordance with ARI Standard 550/590.
2. EER and IPLV values include compressor and control kW.

Table P-6. 60 Hz standard efficiency chillers in metric units

		Condenser Entering Water Temperature (C)								
		25			30			35		
Evaporator Leaving Water Temperature (C)	Unit Size	kW Cooling	kW input	COP	kW Cooling	kW input	COP	kW Cooling	kW input	COP
5	70	256.7	56.7	4.5	244.0	63.0	3.9	230.7	69.9	3.3
	80	295.3	63.3	4.6	281.6	70.5	4.0	266.5	78.6	3.4
	90	340.7	73.6	4.6	325.6	81.2	4.0	308.7	89.9	3.4
	100	383.6	83.5	4.6	366.7	91.6	4.0	348.1	100.7	3.5
	110	412.4	90.5	4.5	394.5	99.3	4.0	374.5	109.2	3.4
	125	447.6	97.8	4.6	427.9	107.2	4.0	406.5	117.8	3.4
7	70	273.2	57.4	4.7	260.2	63.6	4.1	245.8	70.5	3.5
	80	315.0	64.0	4.9	300.3	71.2	4.2	284.1	79.5	3.6
	90	362.9	74.6	4.9	346.3	82.2	4.2	328.8	90.9	3.6
	100	407.9	84.8	4.8	389.9	92.8	4.2	370.6	101.8	3.6
	110	438.8	91.9	4.8	419.5	100.5	4.2	398.7	110.4	3.6
	125	476.1	99.3	4.8	455.3	108.6	4.2	432.8	119.1	3.6
9	70	290.4	58.1	5.0	276.4	64.3	4.3	260.9	71.2	3.7
	80	335.1	64.7	5.2	319.6	72.0	4.4	302.4	80.4	3.8
	90	385.7	75.8	5.1	368.5	83.3	4.4	349.5	91.9	3.8
	100	433.2	86.2	5.0	414.2	94.0	4.4	393.8	102.9	3.8
	110	465.9	93.4	5.0	445.8	101.9	4.4	424.0	111.6	3.8
	125	506.0	100.9	5.0	484.2	110.0	4.4	460.2	120.5	3.8

Notes:
1. Ratings based on evaporator fouling factor of 0.017610 sq. m-°C/kW and condenser fouling factor of 0.044025 sq. m-°C/kW.
2. Consult Trane representative for performance at temperatures outside of the ranges shown.
3. kW input is for compressors only.
4. COP = Coefficient of Performance. Power inputs include compressors and control power.
5. Rated in accordance with ARI Standard 550/590, based on an evaporator temperature drop of 5.6°C and 3 GPM/ton on the condenser.
6. Interpolation between points is permissible. Extrapolation is not permitted.

Performance Data

RTWA

Table P-7. 60 Hz high efficiency chillers in metric units

		Condenser Entering Water Temperature (C)								
		25			30			35		
Evaporator Leaving Water Temperature (C)	Unit Size	kW Cooling	kW input	COP	kW Cooling	kW input	COP	kW Cooling	kW input	COP
5	70	261.6	53.5	4.9	249.6	59.5	4.2	236.6	66.2	3.6
	80	300.3	60.1	5.0	286.9	66.9	4.3	272.5	74.6	3.6
	90	346.7	70.3	4.9	331.9	77.5	4.3	315.4	85.8	3.7
	100	389.9	80.2	4.8	373.8	87.9	4.2	355.8	96.6	3.7
	110	419.1	87.0	4.8	401.5	95.4	4.2	382.5	104.9	3.6
	125	454.6	94.1	4.8	435.6	103.1	4.2	414.9	113.3	3.7
7	70	278.5	54.1	5.1	266.2	60.1	4.4	252.1	66.7	3.8
	80	320.3	60.6	5.3	306.2	67.4	4.5	290.8	75.3	3.9
	90	369.2	71.2	5.2	353.4	78.4	4.5	336.1	86.6	3.9
	100	414.9	81.4	5.1	397.7	89.0	4.5	378.7	97.6	3.9
	110	445.8	88.4	5.0	427.6	96.6	4.4	407.5	106.0	3.8
	125	483.8	95.6	5.1	463.8	104.4	4.4	442.0	114.5	3.9
9	70	296.4	54.7	5.4	283.0	60.7	4.6	268.3	67.3	4.0
	80	341.4	61.2	5.6	326.3	68.1	4.8	310.1	76.0	4.1
	90	392.7	72.1	5.4	376.2	79.3	4.7	357.9	87.5	4.1
	100	440.9	82.7	5.3	422.6	90.1	4.7	402.9	98.6	4.1
	110	474.0	89.8	5.3	454.6	97.8	4.6	433.5	107.1	4.0
	125	514.4	97.2	5.3	493.3	105.8	4.7	470.1	115.7	4.1

Notes:
1. Ratings based on evaporator fouling factor of 0.017610 sq. m-°C/kW and condenser fouling factor of 0.044025 sq. m-°C/kW.
2. Consult Trane representative for performance at temperatures outside of the ranges shown.
3. kW input is for compressors only.
4. COP = Coefficient of Performance. Power inputs include compressors and control power.
5. Rated in accordance with ARI Standard 550/590, based on an evaporator temperature drop of 5.6°C and 3 GPM/ton on the condenser.
6. Interpolation between points is permissible. Extrapolation is not permitted.

Performance Data

Table P-8. 50 Hz standard efficiency chillers in metric units

		Condenser Entering Water Temperature (C)								
		25			30			35		
Evaporator Leaving Water Temperature (C)	Unit Size	kW Cooling	kW input	COP	kW Cooling	kW input	COP	kW Cooling	kW input	COP
5	70	219.1	46.3	4.7	208.5	51.5	4.0	196.9	57.1	3.4
	80	252.8	51.7	4.9	240.9	57.6	4.2	228.2	64.3	3.5
	90	291.1	60.4	4.8	277.8	66.6	4.2	263.7	73.7	3.6
	100	327.0	68.7	4.7	312.6	75.2	4.1	297.1	82.7	3.6
	110	351.6	74.4	4.7	336.1	81.6	4.1	319.6	89.7	3.6
	125	381.1	80.3	4.7	364.6	88.0	4.1	346.3	96.7	3.6
7	70	233.5	46.9	5.0	222.6	52.0	4.3	210.3	57.6	3.6
	80	269.7	52.2	5.1	257.4	58.1	4.4	243.7	64.9	3.7
	90	310.1	61.2	5.1	296.4	67.4	4.4	280.9	74.5	3.8
	100	348.1	69.8	5.0	333.0	76.2	4.4	316.4	83.6	3.8
	110	374.5	75.6	4.9	358.3	82.6	4.3	340.7	90.6	3.8
	125	406.1	81.6	5.0	388.5	89.2	4.3	369.2	97.8	3.8
9	70	248.6	47.4	5.2	236.6	52.5	4.5	223.6	58.1	3.8
	80	287.6	52.8	5.4	274.3	58.8	4.6	259.5	65.6	3.9
	90	330.2	62.0	5.3	315.4	68.2	4.6	299.2	75.3	4.0
	100	370.2	70.9	5.2	354.4	77.2	4.6	336.8	84.5	4.0
	110	398.4	76.8	5.2	381.1	83.7	4.5	362.5	91.6	4.0
	125	432.1	83.0	5.2	413.5	90.4	4.6	393.1	98.9	4.0

Notes:
1. Ratings based on evaporator fouling factor of 0.017610 sq. m-°C/kW and condenser fouling factor of 0.044025 sq. m-°C/kW.
2. Consult Trane representative for performance at temperatures outside of the ranges shown.
3. kW input is for compressors only.
4. COP = Coefficient of Performance. Power inputs include compressors and control power.
5. Rated in accordance with ARI Standard 550/590, based on an evaporator temperature drop of 5.6°C and 3 GPM/ton on the condenser.
6. Interpolation between points is permissible. Extrapolation is not permitted.

Performance Data

Table P-9. 50 Hz high efficiency chillers in metric units

		Condenser Entering Water Temperature (C)								
		25			30			35		
Evaporator Leaving Water Temperature (C)	Unit Size	kW Cooling	kW input	COP	kW Cooling	kW input	COP	kW Cooling	kW input	COP
5	70	222.6	44.0	5.0	212.7	49.0	4.3	201.5	54.5	3.7
	80	256.3	49.4	5.2	245.1	55.0	4.4	232.8	61.4	3.8
	90	295.3	58.0	5.1	282.7	63.9	4.4	269.0	70.7	3.8
	100	331.9	66.3	5.0	317.9	72.6	4.4	302.7	79.7	3.8
	110	356.5	71.9	4.9	341.8	78.8	4.3	325.6	86.6	3.8
	125	386.4	77.7	5.0	370.6	85.1	4.3	352.7	93.5	3.8
7	70	237.7	44.5	5.3	226.8	49.4	4.6	215.2	54.9	3.9
	80	273.9	49.8	5.5	261.9	55.4	4.7	248.6	61.9	4.0
	90	315.0	58.7	5.3	301.7	64.6	4.7	286.9	71.4	4.0
	100	353.4	67.3	5.2	338.9	73.5	4.6	322.8	80.5	4.0
	110	380.1	73.1	5.2	364.3	79.7	4.6	347.0	87.4	4.0
	125	412.1	79.0	5.2	394.9	86.2	4.6	376.2	94.4	4.0
9	70	252.8	45.0	5.6	241.6	49.9	4.8	228.9	55.3	4.1
	80	292.2	50.2	5.8	279.2	55.9	5.0	265.1	62.4	4.2
	90	335.4	59.5	5.6	321.0	65.4	4.9	305.5	72.1	4.2
	100	376.2	68.5	5.5	360.4	74.4	4.8	343.5	81.4	4.2
	110	404.3	74.3	5.4	387.8	80.8	4.8	369.5	88.3	4.2
	125	438.5	80.3	5.4	420.5	87.3	4.8	400.8	95.4	4.2

Notes:
1. Ratings based on evaporator fouling factor of 0.017610 sq. m-°C/kW and condenser fouling factor of 0.044025 sq. m-°C/kW.
2. Consult Trane representative for performance at temperatures outside of the ranges shown.
3. kW input is for compressors only.
4. COP = Coefficient of Performance. Power inputs include compressors and control power.
5. Rated in accordance with ARI Standard 550/590, based on an evaporator temperature drop of 5.6°C and 3 GPM/ton on the condenser.
6. Interpolation between points is permissible. Extrapolation is not permitted.

Performance Data

RTUA

Table P-10. 60 Hz compressor-chillers in English units

		Condenser Entering Air Temperature (F)											
		75			85			95			105		
Evaporator Leaving Water Temperature (F)	Unit Size	Tons	kW input	EER	Tons	kW input	EER	Tons	kW input	EER	Tons	kW input	EER
40	70	73.1	58.1	13.1	68.4	63.7	11.3	63.5	69.9	9.7	63.5	69.9	9.7
	80	83.3	68.3	12.9	78.1	74.8	11.2	72.7	82.0	9.6	72.7	82.0	9.6
	90	92.3	81.5	12.1	86.8	88.4	10.6	81.0	96.3	9.2	81.0	96.3	9.2
	100	100.5	94.3	11.4	94.7	101.6	10.1	88.5	110.2	8.8	88.5	110.2	8.8
	110	108.3	102.4	11.4	102.0	110.4	10.1	95.3	119.7	8.8	95.3	119.7	8.8
	125	117.5	111.7	11.5	110.6	120.3	10.1	103.3	130.5	8.8	103.3	130.5	8.8
42	70	75.8	58.9	13.4	71.0	64.5	11.6	66.0	70.8	9.9	66.0	70.8	9.9
	80	86.4	69.5	13.2	81.1	76.0	11.5	75.6	83.2	9.9	75.6	83.2	9.9
	90	95.7	82.9	12.3	90.0	89.8	10.8	84.0	97.7	9.4	84.0	97.7	9.4
	100	104.1	95.9	11.7	98.1	103.2	10.3	91.7	111.8	9.0	91.7	111.8	9.0
	110	112.1	104.2	11.7	105.6	112.1	10.3	98.8	121.5	9.0	98.8	121.5	9.0
	125	121.7	113.6	11.7	114.6	122.3	10.3	107.1	132.4	9.0	107.1	132.4	9.0
44	70	78.5	59.7	13.7	73.6	65.3	11.9	68.5	71.6	10.2	68.5	71.6	10.2
	80	89.6	70.7	13.5	84.1	77.2	11.7	78.5	84.5	10.1	78.5	84.5	10.1
	90	99.1	84.4	12.6	93.3	91.2	11.1	87.1	99.1	9.6	87.1	99.1	9.6
	100	107.7	97.6	11.9	101.5	104.8	10.5	95.0	113.4	9.2	95.0	113.4	9.2
	110	116.1	106.0	11.9	109.4	114.0	10.5	102.3	123.3	9.2	102.3	123.3	9.2
	125	125.9	115.7	11.9	118.6	124.3	10.5	110.9	134.4	9.2	110.9	134.4	9.2
46	70	81.3	60.6	14.0	76.3	66.2	12.2	71.1	72.5	10.5	71.1	72.5	10.5
	80	92.9	72.0	13.8	87.3	78.4	12.0	81.5	85.7	10.3	81.5	85.7	10.3
	90	102.6	85.9	12.8	96.6	92.7	11.3	90.3	100.6	9.8	90.3	100.6	9.8
	100	111.4	99.3	12.1	105.0	106.5	10.7	98.3	115.1	9.4	98.3	115.1	9.4
	110	120.1	107.9	12.1	113.2	115.8	10.7	105.9	125.1	9.3	105.9	125.1	9.3
	125	130.3	117.8	12.1	122.7	126.3	10.7	114.8	136.4	9.4	114.8	136.4	9.4
48	70	84.1	61.5	14.3	79.0	67.0	12.5	73.7	73.4	10.8	73.7	73.4	10.8
	80	96.2	73.2	14.0	90.5	79.7	12.2	84.5	87.0	10.6	84.5	87.0	10.6
	90	106.2	87.4	13.1	100.0	94.2	11.5	93.5	102.1	10.0	93.5	102.1	10.0
	100	115.2	101.1	12.3	108.6	108.3	10.9	101.7	116.8	9.6	101.7	116.8	9.6
	110	124.1	109.9	12.3	117.1	117.7	10.9	109.6	127.0	9.5	109.6	127.0	9.5
	125	134.7	119.9	12.3	127.0	128.4	10.9	118.8	138.5	9.5	118.8	138.5	9.5
50	70	87.0	62.3	14.6	81.7	67.9	12.8	76.3	74.2	11.0	76.3	74.2	11.0
	80	99.6	74.5	14.3	93.7	81.0	12.5	87.6	88.2	10.8	87.6	88.2	10.8
	90	109.8	88.9	13.3	103.5	95.7	11.7	96.8	103.6	10.2	96.8	103.6	10.2
	100	119.0	102.9	12.5	112.3	110.1	11.1	105.2	118.6	9.8	105.2	118.6	9.8
	110	128.3	111.8	12.5	121.0	119.7	11.1	113.4	128.9	9.7	113.4	128.9	9.7
	125	139.2	122.1	12.5	131.2	130.6	11.1	122.9	140.6	9.7	122.9	140.6	9.7

Notes:
1. Ratings based on evaporator fouling factor of 0.00010 hr-sq. ft.-°F/Btu.
2. Consult Trane representative for performance at temperatures outside of the ranges shown.
3. kW input is for compressors only.
4. EER = Energy Efficiency Ratio (Btu/watt-hour). Power inputs include compressors and control power.
5. Rated in accordance with ARI Standard 550/590, based on an evaporator temperature drop of 10°F.
6. Interpolation between points is permissible. Extrapolation is not permitted.

Table P-11. 50 Hz compressor-chillers in English units

		Condenser Entering Air Temperature (F)											
		75			85			95			105		
Evaporator Leaving Water Temperature (F)	Unit Size	Tons	kW input	EER	Tons	kW input	EER	Tons	kW input	EER	Tons	kW input	EER
40	70	63.0	47.1	13.4	59.0	51.6	11.7	54.8	56.7	10.0	50.5	62.3	8.5
	80	72.0	55.4	13.4	67.5	60.5	11.7	62.9	66.4	10.0	58.2	72.8	8.6
	90	79.6	66.2	12.5	74.9	71.6	11.0	70.0	77.9	9.6	64.9	85.0	8.2
	100	86.6	76.8	11.8	81.7	82.5	10.5	76.4	89.2	9.2	70.9	97.0	7.9
	110	93.2	83.3	11.8	88.0	89.5	10.5	82.3	96.8	9.2	76.4	105.3	7.9
	125	101.2	90.6	11.9	95.4	97.3	10.6	89.3	105.3	9.2	82.8	114.5	7.9
42	70	65.3	47.8	13.8	61.2	52.3	12.0	57.0	57.3	10.3	52.6	63.0	8.8
	80	74.8	56.3	13.7	70.2	61.5	12.0	65.5	67.3	10.3	60.6	73.7	8.8
	90	82.6	67.4	12.8	77.8	72.8	11.3	72.7	79.0	9.8	67.4	86.1	8.4
	100	89.7	78.1	12.0	84.7	83.8	10.7	79.3	90.5	9.4	73.6	98.3	8.1
	110	96.7	84.8	12.1	91.2	90.9	10.7	85.4	98.2	9.4	79.3	106.7	8.1
	125	104.9	92.2	12.2	98.9	98.9	10.8	92.6	106.8	9.4	86.0	116.0	8.1
44	70	67.7	48.5	14.1	63.5	52.9	12.3	59.2	58.0	10.6	54.7	63.6	9.1
	80	77.6	57.3	14.0	72.9	62.5	12.2	68.1	68.3	10.6	63.1	74.7	9.1
	90	85.7	68.6	13.0	80.7	73.9	11.5	75.5	80.2	10.1	70.0	87.3	8.7
	100	92.9	79.5	12.3	87.7	85.1	10.9	82.2	91.8	9.6	76.4	99.6	8.3
	110	100.1	86.3	12.3	94.5	92.4	11.0	88.6	99.7	9.6	82.3	108.1	8.3
	125	108.7	93.9	12.4	102.5	100.5	11.0	96.0	108.4	9.7	89.2	117.6	8.3
46	70	70.1	49.2	14.4	65.8	53.6	12.6	61.4	58.7	10.9	56.8	64.3	9.3
	80	80.5	58.3	14.3	75.7	63.5	12.5	70.7	69.3	10.9	65.6	75.7	9.3
	90	88.8	69.8	13.3	83.6	75.1	11.8	78.3	81.3	10.3	72.7	88.4	8.9
	100	96.2	81.0	12.5	90.9	86.5	11.2	85.2	93.1	9.8	79.2	100.9	8.5
	110	103.7	87.8	12.6	97.9	93.9	11.2	91.8	101.1	9.8	85.4	109.6	8.5
	125	112.5	95.6	12.6	106.2	102.2	11.2	99.5	110.1	9.9	92.5	119.2	8.5
48	70	72.6	49.9	14.8	68.2	54.3	12.9	63.7	59.3	11.2	59.0	65.0	9.6
	80	83.5	59.4	14.6	78.5	64.5	12.8	73.4	70.3	11.1	68.1	76.7	9.6
	90	91.9	71.1	13.6	86.7	76.4	12.0	81.1	82.5	10.5	75.4	89.6	9.1
	100	99.6	82.5	12.7	94.1	87.9	11.4	88.2	94.5	10.0	82.1	102.3	8.7
	110	107.3	89.5	12.8	101.4	95.5	11.4	95.1	102.7	10.0	88.5	111.1	8.7
	125	116.5	97.4	12.9	109.9	103.9	11.5	103.1	111.7	10.1	95.9	120.9	8.7
50	70	75.1	50.6	15.1	70.6	55.0	13.2	66.0	60.0	11.5	61.2	65.8	9.9
	80	86.5	60.4	14.9	81.4	65.5	13.1	76.1	71.3	11.4	70.7	77.7	9.8
	90	95.1	72.3	13.8	89.7	77.6	12.3	84.1	83.8	10.8	78.2	90.8	9.3
	100	103.0	84.0	13.0	97.3	89.4	11.6	91.3	96.0	10.3	85.0	103.7	8.9
	110	111.0	91.1	13.0	104.9	97.1	11.6	98.4	104.2	10.3	91.6	112.6	8.9
	125	120.5	99.2	13.1	113.8	105.7	11.7	106.7	113.5	10.3	99.3	122.6	8.9

Notes:
1. Ratings based on evaporator fouling factor of 0.00010 hr-sq. ft.-°F/Btu.
2. Consult Trane representative for performance at temperatures outside of the ranges shown.
3. kW input is for compressors only.
4. EER = Energy Efficiency Ratio (Btu/watt-hour). Power inputs include compressors and control power.
5. Rated in accordance with ARI Standard 550/590, based on an evaporator temperature drop of 10°F.
6. Interpolation between points is permissible. Extrapolation is not permitted.

Performance Data

Table P-12. 60 Hz compressor-chillers in metric units

		Condenser Entering Air Temperature (C)											
		30			35			40			45		
Evaporator Leaving Water Temperature (C)	Unit Size	kW Cooling	kW input	COP	kW Cooling	kW input	COP	kW Cooling	kW input	COP	kW Cooling	kW input	COP
5	70	243.3	64.7	3.3	227.5	70.4	2.9	211.7	76.6	2.5	195.5	83.3	2.1
	80	277.8	76.1	3.3	260.5	82.6	2.9	243.0	89.8	2.5	225.0	97.6	2.1
	90	308.7	89.8	3.1	290.1	97.0	2.7	270.7	105.0	2.4	250.7	113.8	2.0
	100	336.5	103.2	3.0	316.8	111.0	2.6	295.7	119.8	2.3	274.3	129.7	2.0
	110	362.5	112.1	2.9	341.1	120.6	2.6	318.6	130.2	2.3	295.3	141.0	2.0
	125	393.1	122.2	3.0	369.9	131.4	2.6	345.3	141.8	2.3	320.0	153.5	2.0
7	70	259.8	66.2	3.5	243.7	71.9	3.0	227.1	78.1	2.6	210.3	85.0	2.2
	80	297.1	78.3	3.4	279.2	84.8	3.0	260.5	92.0	2.6	241.6	99.8	2.2
	90	329.5	92.4	3.2	309.8	99.5	2.8	289.4	107.5	2.5	268.6	116.4	2.1
	100	358.3	106.1	3.1	337.5	113.9	2.7	315.7	122.7	2.4	292.9	132.7	2.1
	110	386.1	115.4	3.1	363.6	123.8	2.7	340.0	133.4	2.4	315.7	144.2	2.0
	125	418.8	125.8	3.1	394.1	135.0	2.7	368.5	145.4	2.4	341.8	157.1	2.0
9	70	276.7	67.7	3.6	259.8	73.4	3.2	242.6	79.8	2.7	225.4	86.8	2.4
	80	317.1	80.5	3.5	298.2	87.1	3.1	278.8	94.3	2.7	259.1	102.2	2.3
	90	350.6	95.1	3.3	330.2	102.2	2.9	308.7	110.2	2.6	286.9	119.1	2.2
	100	380.8	109.3	3.2	359.0	117.0	2.8	335.8	125.8	2.5	312.2	135.7	2.1
	110	410.3	118.8	3.2	386.8	127.2	2.8	362.2	136.8	2.5	336.5	147.6	2.1
	125	445.1	129.6	3.2	419.1	138.7	2.8	392.4	149.1	2.5	364.6	160.8	2.1

Notes:
1. Ratings based on evaporator fouling factor of 0.017610 sq. m-°C/kW.
2. Consult Trane representative for performance at temperatures outside of the ranges shown.
3. kW input is for compressors only.
4. COP = Coefficient of Performance. Power inputs include compressors and control power.
5. Rated in accordance with ARI Standard 550/590, based on an evaporator temperature drop of 5.6°C.
6. Interpolation between points is permissible. Extrapolation is not permitted.

Performance Data

Table P-13. 50 Hz compressor-chillers in metric units

		Condenser Entering Air Temperature (C)											
		30			35			40			45		
Evaporator Leaving Water Temperature (C)	Unit Size	kW Cooling	kW input	COP	kW Cooling	kW input	COP	kW Cooling	kW input	COP	kW Cooling	kW input	COP
	70	209.9	52.4	3.4	196.5	57.0	3.0	182.8	62.0	2.6	169.1	67.5	2.2
	80	240.5	61.6	3.4	225.7	66.8	3.0	210.6	72.6	2.6	195.1	78.9	2.2
5	90	266.9	72.8	3.2	250.7	78.5	2.8	234.5	84.8	2.5	217.6	91.9	2.1
	100	290.4	83.7	3.1	273.9	89.8	2.7	256.3	96.8	2.4	238.0	104.7	2.1
	110	312.9	90.9	3.1	295.0	97.5	2.7	276.0	105.1	2.4	256.3	113.7	2.1
	125	339.3	98.9	3.1	319.6	106.1	2.7	298.9	114.3	2.4	277.8	123.6	2.1
	70	224.3	53.6	3.6	210.3	58.2	3.1	196.2	63.3	2.7	181.8	68.8	2.4
	80	257.7	63.3	3.6	242.3	68.6	3.1	226.1	74.3	2.7	209.9	80.6	2.4
7	90	284.8	74.9	3.4	268.3	80.5	3.0	251.0	86.9	2.6	233.1	94.0	2.3
	100	309.8	86.1	3.2	292.2	92.2	2.8	273.5	99.1	2.5	254.6	107.0	2.2
	110	334.0	93.5	3.2	314.7	100.1	2.8	295.0	107.7	2.5	274.3	116.2	2.2
	125	362.2	101.8	3.2	341.4	108.9	2.9	319.6	117.1	2.5	297.1	126.4	2.2
	70	239.1	54.8	3.7	224.7	59.4	3.3	209.9	64.5	2.9	194.8	70.2	2.5
	80	275.3	65.1	3.7	259.1	70.4	3.3	242.3	76.1	2.9	225.4	82.5	2.5
9	90	303.8	77.1	3.5	286.2	82.7	3.1	268.3	89.0	2.7	249.6	96.1	2.4
	100	329.8	88.7	3.3	311.2	94.7	3.0	291.8	101.6	2.6	271.8	109.4	2.3
	110	355.5	96.3	3.3	335.4	102.8	3.0	314.7	110.3	2.6	292.9	118.9	2.3
	125	385.7	104.8	3.3	363.6	111.9	3.0	341.1	120.1	2.6	317.5	129.3	2.3

Notes:
1. Ratings based on evaporator fouling factor of 0.017610 sq. m-°C/kW.
2. Consult Trane representative for performance at temperatures outside of the ranges shown.
3. kW input is for compressors only.
4. COP = Coefficient of Performance. Power inputs include compressors and control power.
5. Rated in accordance with ARI Standard 550/590, based on an evaporator temperature drop of 5.6°C.
6. Interpolation between points is permissible. Extrapolation is not permitted.

Performance Data

RTUA

Table P-14 – ARI Part-Load Performance - 60 Hz

Unit Size	% Load	Tons	EER	IPLV
RTUA 70	100	68.4	10.2	
	75	51.3	12.0	**13.5**
	50	34.2	14.6	
	25	17.1	15.2	
RTUA 80	100	78.3	10.1	
	75	58.7	11.7	**13.1**
	50	39.2	14.9	
	25	19.6	11.7	
RTUA 90	100	87.2	9.6	
	75	65.4	10.2	**11.7**
	50	43.6	12.9	
	25	21.8	12.6	
RTUA 100	100	95.0	9.2	
	75	71.3	10.4	**11.9**
	50	47.5	12.8	
	25	23.8	14.0	
RTUA 110	100	102.4	9.2	
	75	76.8	10.4	**12.0**
	50	51.2	13.1	
	25	25.6	13.9	
RTUA125	100	111.0	9.2	
	75	83.3	10.5	**11.9**
	50	55.5	12.9	
	25	27.8	13.3	

Notes:
1. IPLV values are rated in accordance with ARI Standard 550/590.
2. EER and IPLV values include compressor and control kW.

Performance Data

Figure P-1 — RTWA — Evaporator Water Pressure Drop

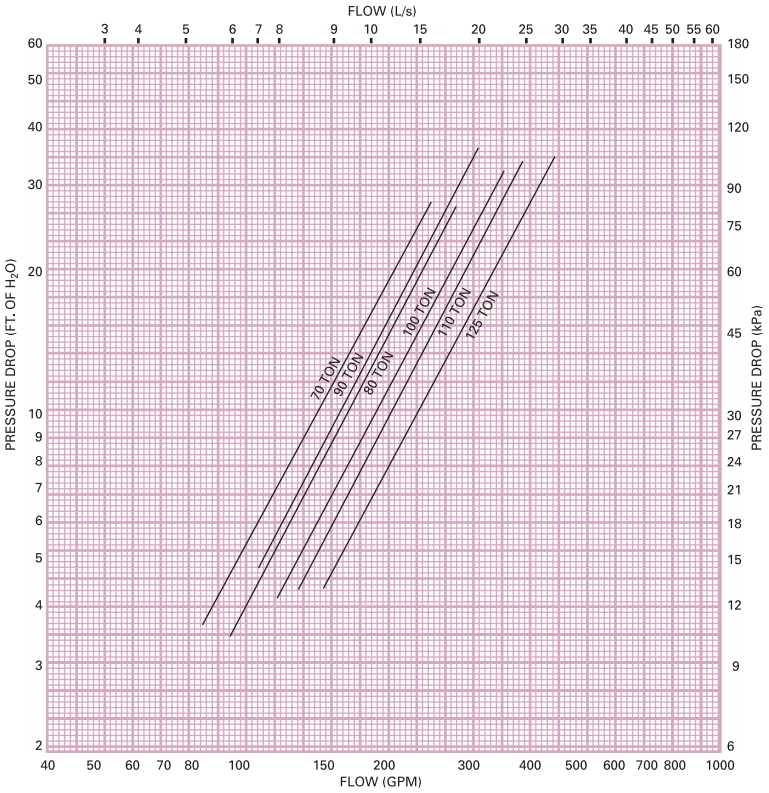

Figure P-2 — RTWA — Long Condenser Pressure Drop

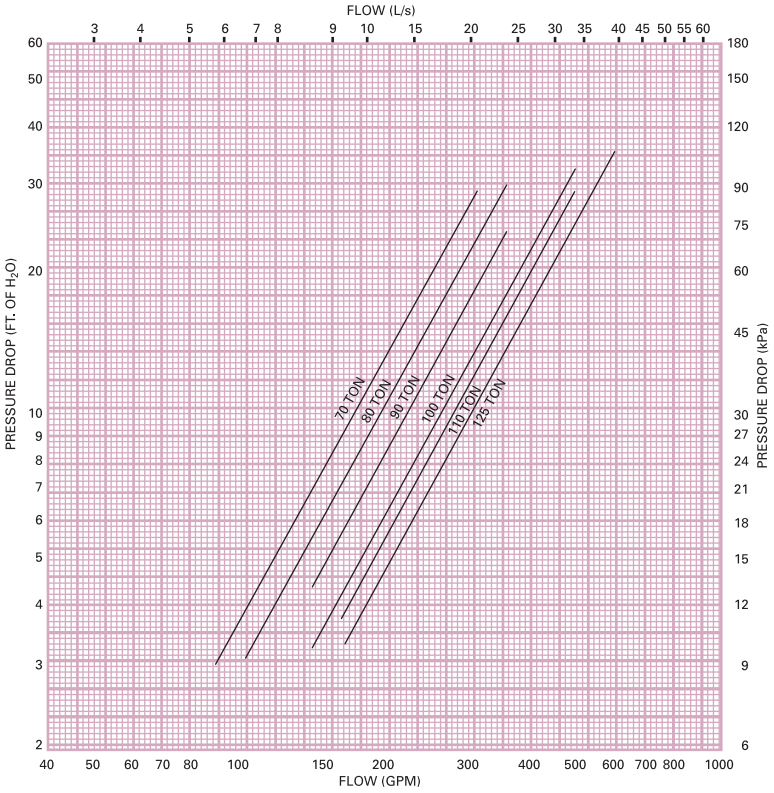

Performance Data

Figure P-3 — RTWA — Standard Condenser Water Pressure Drop

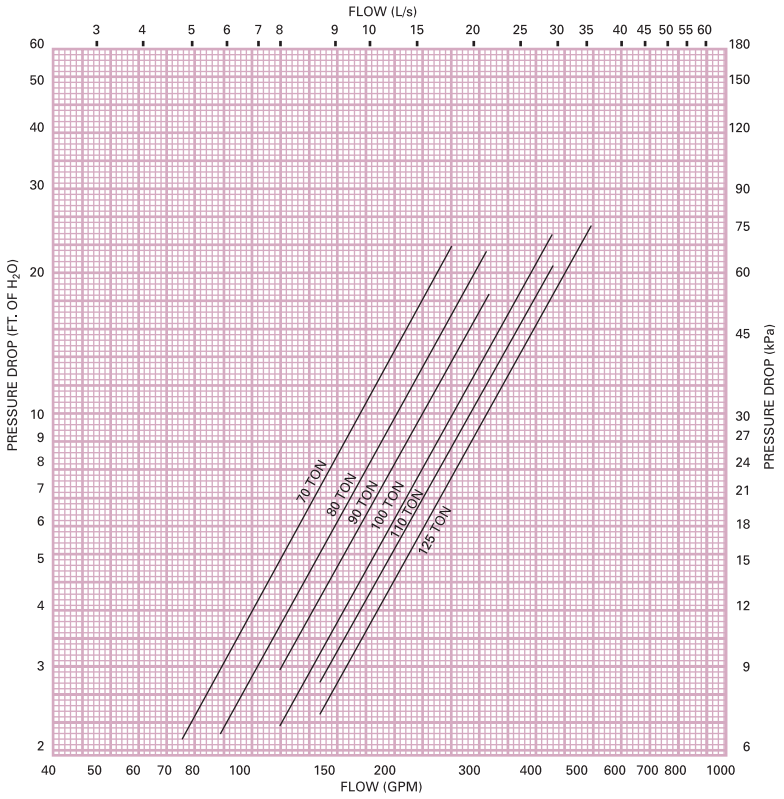

Performance Data

Figure P-4 — RTUA 35-Ton Circuit (MBH vs. LWTE)

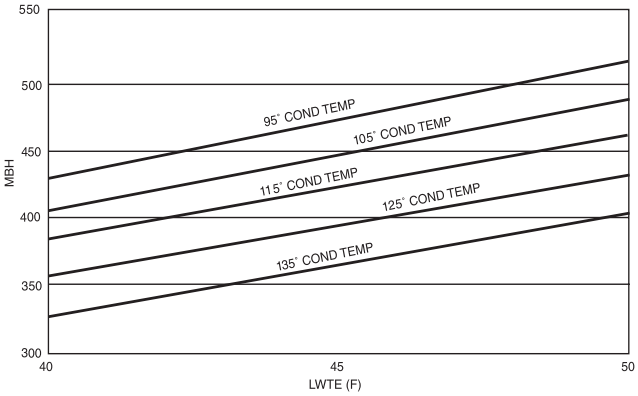

Figure P-5 — RTUA 35-Ton Circuit (kW vs. LWTE)

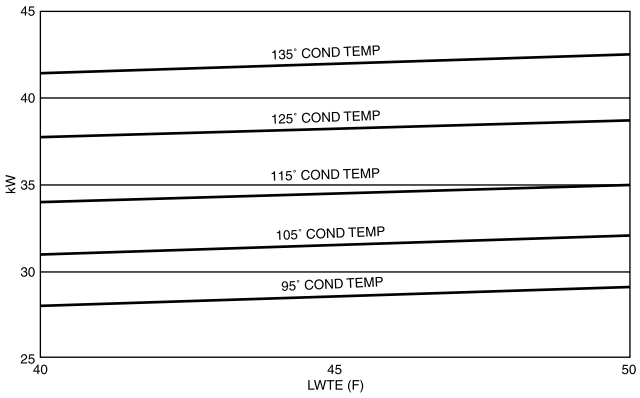

Figure P-6 — RTUA 40-Ton Circuit (MBH vs. LWTE)

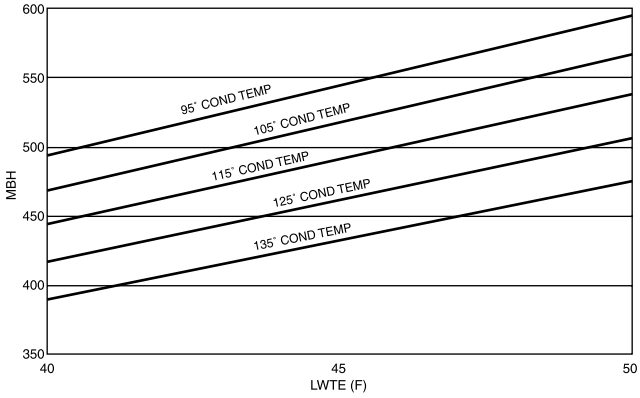

Figure P-7 — RTUA 40-Ton Circuit (kW vs. LWTE)

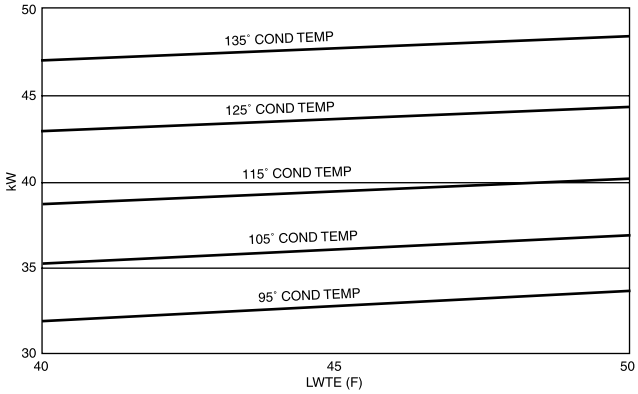

Performance Data

Figure P-8 — RTUA 50-Ton Circuit (MBH vs. LWTE)

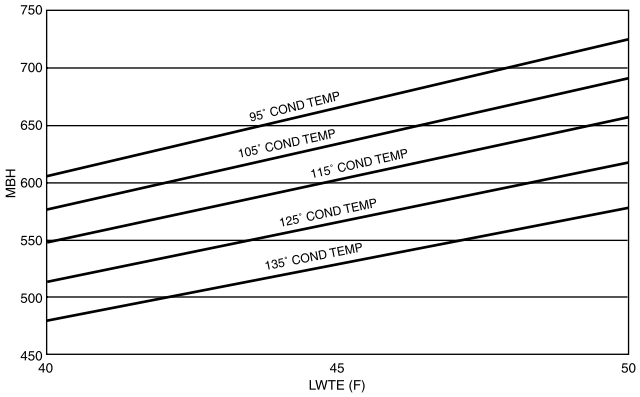

Figure P-9 — RTUA 50-Ton Circuit (kW vs. LWTE)

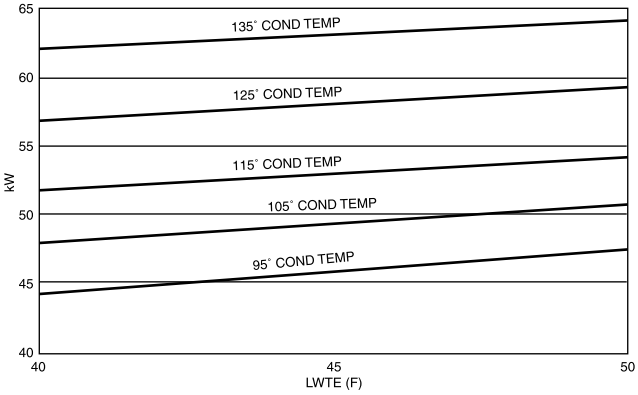

Figure P-10 — RTUA 60-Ton Circuit (MBH vs. LWTE)

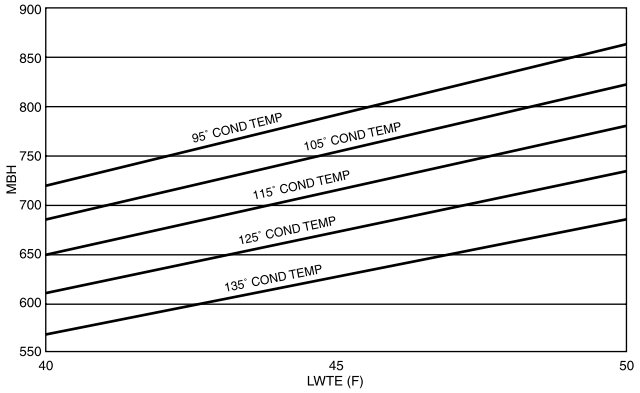

Figure P-11 — RTUA 60-Ton Circuit (kW vs. LWTE)

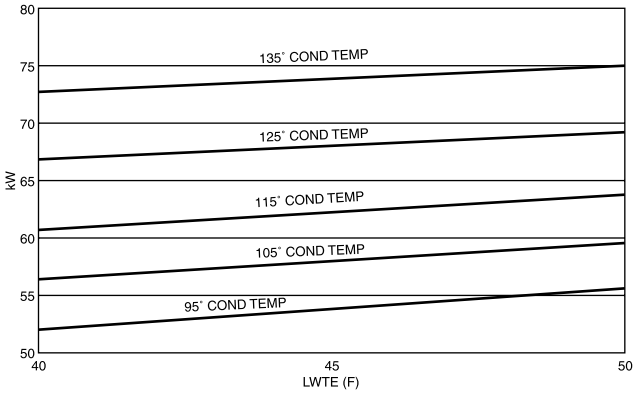

Electrical Data

RTWA

Table E-1 — Electrical Data (60 Hz, 3 Phase) - RTWA Standard Condensing Temperature (9)

	Unit Wiring				Motor Data		
Unit (1)	Rated		Max. Fuse	RecTime		Compressor (Ea.)	
Size	Voltage	MCA (2)	or HACR (3)	Delay or RDE (4)	Qty.	RLA (5)	LRA (6)
RTWA 70	200	237	300	300	2	105/105	800/800
	230	205	250	250	2	91/91	690/690
	460	104	125	125	2	46/46	330/330
	575	84	110	100	2	37/37	270/270
	400/50	99	125	110	2	44/44	325/325
RTWA 80	200	279	400	350	2	124/124	880/880
	230	243	350	300	2	108/108	760/760
	460	122	175	150	2	54/54	380/380
	575	97	125	110	2	43/43	304/304
	400/50	117	150	150	2	52/52	375/375
RTWA 90	200	329	450	400	2	164/124	990/880
	230	287	400	350	2	143/108	820/760
	460	144	200	175	2	72/54	410/380
	575	115	150	150	2	57/43	328/304
	400/50	139	200	175	2	69/52	402/375
RTWA 100	200	369	500	450	2	164/164	990/990
	230	322	450	400	2	143/143	820/820
	460	162	225	200	2	72/72	410/410
	575	129	175	150	2	57/57	328/328
	400/50	156	200	175	2	69/69	402/402
RTWA 110	200	407	600	500	2	194/164	1190/990
	230	355	500	400	2	169/143	1044/820
	460	179	250	200	2	85/72	522/410
	575	142	200	175	2	68/57	420/328
	400/50	172	250	200	2	82/69	512/402
RTWA 125	200	437	600	500	2	194/194	1190/1190
	230	381	500	450	2	169/169	1044/1044
	460	192	250	225	2	85/85	522/522
	575	153	200	175	2	68/68	420/420
	400/50	185	250	225	2	82/82	512/512

Notes:
1. For RTWA chillers with the High Condensing Temperature option, refer to Table E-2.
2. MCA-Minimum Circuit Ampacity — 125 percent of largest compressor RLA plus 100 percent of the second compressor RLA.
3. HACR type circuit breaker for CSA only. Fuse size (HACR breaker) 225 percent of the largest compressor RLA plus 100 percent of the second compressor RLA.
4. RECOMMENDED TIME DELAY OR DUAL ELEMENT (RDE) FUSE SIZE: 150 percent of the largest compressor RLA plus 100 percent of the second compressor RLA.
5. RLA — Rated Load Amps — rated in accordance with UL Standard 465.
6. LRA — Locked Rotor Amps — based on full winding starts.
7. Local codes may take precedence.
8. VOLTAGE UTILIZATION RANGE:

Rated Voltage	Utilization Range
200	180-220
230	208-254
460	414-506
575	516-633

9. Standard condensing temperature option refers to leaving condenser water temperatures below 110 F.

Electrical Data

Table E-2 — Electrical Data (60 Hz, 3 Phase) - RTWA High Condensing Temperature (10) or Low Evaporator Temperature (11), RTUA

Unit (1) Size	Rated Voltage	Unit Wiring MCA (2)	Max Fuse or HACR (3)	Rec Time Delay or RDE (4)	Motor Data Compressor (Ea.) Qty.	RLA (5)	LRA (6)
RTUA 70	200	259	350	300	2	115/115	800/800
	230	225	300	250	2	100/100	690/690
	460	113	150	125	2	50/50	330/330
	575	90	125	100	2	40/40	270/270
	400/50	108	150	125	2	48/48	325/325
RTUA 80	200	320	450	400	2	142/142	880/880
	230	279	400	350	2	124/124	760/760
	460	140	200	175	2	62/62	380/380
	575	113	150	125	2	50/50	304/304
	400/50	135	200	175	2	60/60	375/375
RTUA 90	200	382	500	450	2	192/142	990/880
	230	333	450	400	2	167/124	820/760
	460	167	250	200	2	84/62	410/380
	575	134	200	175	2	67/50	328/304
	400/50	162	250	200	2	81/60	402/375
RTUA 100	200	432	600	500	2	192/192	990/990
	230	376	500	450	2	167/167	820/820
	460	189	250	225	2	84/84	410/410
	575	151	200	175	2	67/67	328/328
	400/50	183	250	225	2	81/81	402/402
RTUA 110	200	484	700	600	2	233/192	1190/990
	230	421	600	500	2	203/167	1044/820
	460	211	300	250	2	101/84	522/410
	575	169	225	200	2	81/67	420/328
	400/50	203	300	250	2	97/81	512/402
RTUA 125	200	525	700	600	2	233/233	1190/1190
	230	457	600	600	2	203/203	1044/1044
	460	228	300	300	2	101/101	522/522
	575	183	250	225	2	81/81	420/420
	400/50	219	300	300	2	97/97	512/512

Notes:
1. In addition to all RTUA chillers, the information in this table should be used for RTWA chillers with the High Condensing Temperature option.
2. MCA-Minimum Circuit Ampacity – 125 percent of largest compressor RLA plus 100 percent of the second compressor RLA.
3. HACR type circuit breaker for CSA only. Fuse size (HACR breaker) 225 percent of the largest compressor RLA plus 100 percent of the second compressor RLA.
4. RECOMMENDED TIME DELAY OR DUAL ELEMENT (RDE) FUSE SIZE: 150 percent of the largest compressor RLA plus 100 percent of the second compressor RLA.
5. RLA — Rated Load Amps — rated in accordance with UL Standard 465.
6. LRA — Locked Rotor Amps — based on full winding starts.
7. Local codes may take precedence.
8. VOLTAGE UTILIZATION RANGE:

Rated Voltage	Utilization Range
200	180-220
230	208-254
460	414-506
575	516-633

9. High condensing temperature option refers to leaving condenser water temperatures above 110 F.
10. Low temperature evaporator option refers to leaving chilled fluid temperatures less than 40 F.

Electrical Data

RTCA

Table E-3 — Electrical Data (60 Hz, 3 Phase) - RTCA

		Unit Wiring			Fan Motor Data			
Unit Size	Rated Voltage (V/HZ/Phase)	MCA (1)	Max. Fuse or HACR (2)	Rec Time Delay or RDE (3)	Qty.	kW	FLA	Control kW
RTCA 70	200/60/3	39.6	40	40	8	1	4.8	0.75
	230/60/3	39.6	40	40	8	1	4.8	0.75
	480/60/3	20.6	25	25	8	1	2.5	0.75
	575/60/3	18.2	20	20	8	1	2.2	0.75
RTCA 80	200/60/3	39.6	40	40	8	1	4.8	0.75
	230/60/3	39.6	40	40	8	1	4.8	0.75
	480/60/3	20.6	25	25	8	1	2.5	0.75
	575/60/3	18.2	20	20	8	1	2.2	0.75
RTCA 90	200/60/3	44.4	45	45	9	1	4.8	0.75
	230/60/3	44.4	45	45	9	1	4.8	0.75
	480/60/3	23.1	25	25	9	1	2.5	0.75
	575/60/3	20.4	25	25	9	1	2.5	0.75
RTCA 100	200/60/3	49.2	50	50	10	1	4.8	0.75
	230/60/3	49.2	50	50	10	1	4.8	0.75
	480/60/3	25.6	30	30	10	1	2.5	0.75
	575/60/3	22.6	25	25	10	1	2.2	0.75
RTCA 110	200/60/3	49.2	50	50	10	1	4.8	0.75
	230/60/3	49.2	50	50	10	1	4.8	0.75
	480/60/3	25.6	30	30	10	1	2.5	0.75
	575/60/3	22.6	25	25	10	1	2.2	0.75
RTCA 125	200/60/3	49.2	50	50	10	1	4.8	0.75
	230/60/3	49.2	50	50	10	1	4.8	0.75
	480/60/3	25.6	30	30	10	1	2.5	0.75
	575/60/3	22.6	25	25	10	1	2.2	0.75

Notes:
1. MCA - Minimum Circuit Ampacity — 125 percent of largest fan motor FLA plus 100 percent of the other fan motors FLAs.
2. HACR type circuit breaker for CSA only. Fuse size (HACR breaker) 225 percent of the largest fan motor FLA plus 100 percent of the other fan motor FLAs.
3. RECOMMENDED TIME DELAY OR DUAL ELEMENT (RDE) FUSE SIZE: 150 percent of the largest fan motor FLA plus 100 percent of the other fan motor FLAs.
4. RLA — Rated Load Amps — rated in accordance with UL Standard 1995.
5. Local codes may take precedence.
6. LRA — Locked Rotor Amps — based on full winding starts.
7. VOLTAGE UTILIZATION RANGE:

Rated Voltage	Utilization Range
200	180-220
230	208-254
460	414-506
575	516-633

Jobsite Connections RTWA

Table J-1 — Customer Wire Selection (Y-Delta and X-Line) (60 Hz, 3 Phase) RTWA standard condensing temperature (3)

		Wire Selection Size To Main Terminal Block		Wire Selection Size To Disconnect (2)	
Unit Size	Rated Voltage	Terminal Size	Connector Wire Range	Disconnect Size (1)	Connector Wire Range
RTWA 70	*200	335 amps	#6 — 350 MCM	400 amps	(1) 3/0 — 500 MCM & (1) 3/0 — 250 MCM
	*230	335 amps	#6 — 350 MCM	225 amps	2/0 to 300 MCM
	460	175 amps	#14 awg to 2/0	150 amps	#4 to 4/0
	575	175 amps	#14 awg to 2/0	150 amps	#4 to 4/0
	400/50	175 amps	#14 awg to 2/0	150 amps	#4 to 4/0
RTWA 80	*200	335 amps	#6 — 350 MCM	400 amps	(1) 3/0 — 500 MCM & (1) 3/0 — 250 MCM
	*230	335 amps	#6 — 350 MCM	400 amps	(1) 3/0 — 500 MCM & (1) 3/0 — 250 MCM
	460	175 amps	#14 awg to 2/0	150 amps	#4 to 4/0
	575	175 amps	#14 awg to 2/0	150 amps	#4 to 4/0
	400/50	175 amps	#14 awg to 2/0	150 amps	#4 to 4/0
RTWA 90	*200	335 amps	#6 — 350 MCM	400 amps	(1) 3/0 — 500 MCM & (1) 3/0 — 250 MCM
	*230	335 amps	#6 — 350 MCM	400 amps	(1) 3/0 — 500 MCM & (1) 3/0 — 250 MCM
	460	175 amps	#14 awg to 2/0	150 amps	#4 to 4/0
	575	175 amps	#14 awg to 2/0	150 amps	#4 to 4/0
	400/50	175 amps	#14 awg to 2/0	150 amps	#4 to 4/0
RTWA 100	*200	760 amps	#4 — 500 MCM	400 amps	(1) 3/0 — 500 MCM & (1) 3/0 — 250 MCM
	*230	335 amps	#6 — 350 MCM	400 amps	(1) 3/0 — 500 MCM & (1) 3/0 — 250 MCM
	460	175 amps	#14 awg to 2/0	225 amps	2/0 — 300 MCM
	575	175 amps	#14 awg to 2/0	150 amps	#4 to 4/0
	400/50	175 amps	#14 awg to 2/0	150 amps	#4 to 4/0
RTWA 110	*200	760 amps	#4 — 500 MCM	600 amps	4/0 to 350 MCM
	*230	760 amps	#4 — 500 MCM	400 amps	(1) 3/0 — 500 MCM & (1) 3/0 — 250 MCM
	460	335 amps	#6 — 350 MCM	225 amps	2/0 — 300 MCM
	575	175 amps	#14 awg to 2/0	150 amps	#4 to 4/0
	460	335 amps	#6 — 350 MCM	225 amps	2/0 — 300 MCM
RTWA 125	*200	760 amps	#4 — 500 MCM	600 amps	4/0 to 350 MCM
	*230	760 amps	#4 — 500 MCM	400 amps	(1) 3/0 — 500 MCM & (1) 3/0 — 250 MCM
	460	335 amps	#6 — 350 MCM	225 amps	2/0 — 300 MCM
	575	175 amps	#14 awg to 2/0	225 amps	2/0 — 300 MCM
	400/50	175 amps	#6 — 350 MCM	225 amps	2/0 — 300 MCM

Notes:
*Unavailable on X-Line starts
1. Optional non-fused disconnect.
2. Copper wire only, sized per N.E.C., based on nameplate minimum circuit ampacity (MCA)
3. Standard condensing temperature option refers to leaving condenser water temperatures below 110 F.

Jobsite Connections

Table J-2 — Customer Wire Selection (Y-Delta and X-Line) (60 Hz, 3 Phase) - RTWA High Cond Temp (3) or Low Evap Temp (4), RTUA

		Wire Selection Size To Main Terminal Block		Wire Selection Size To Disconnect (2)	
Unit Size	Rated Voltage	Terminal Size	Connector Wire Range	Disconnect Size (1)	Connector Wire Range
RTUA 70	*200	335 amps	#6 — 350 MCM	400 amps	(1) 3/0 — 500 MCM & (1) 3/0 — 250 MCM
	*230	335 amps	#6 — 350 MCM	400 amps	(1) 3/0 — 500 MCM & (1) 3/0 — 250 MCM
	460	175 amps	#14 awg to 2/0	150 amps	#4 to 4/0
	575	175 amps	#14 awg to 2/0	150 amps	#4 to 4/0
	400/50	175 amps	#14 awg to 2/0	150 amps	#4 to 4/0
RTUA 80	*200	335 amps	#6 — 350 MCM	400 amps	(1) 3/0 — 500 MCM & (1) 3/0 — 250 MCM
	*230	335 amps	#6 — 350 MCM	400 amps	(1) 3/0 — 500 MCM & (1) 3/0 — 250 MCM
	460	175 amps	#14 awg to 2/0	150 amps	#4 to 4/0
	575	175 amps	#14 awg to 2/0	150 amps	#4 to 4/0
	400/50	175 amps	#14 awg to 2/0	225 amps	2/0 — 300 MCM
RTUA 90	*200	760 amps	#4 — 500 MCM	400 amps	(1) 3/0 — 500 MCM & (1) 3/0 — 250 MCM
	*230	760 amps	#4 — 500 MCM	400 amps	(1) 3/0 — 500 MCM & (1) 3/0 — 250 MCM
	460	175 amps	#14 awg to 2/0	225 amps	2/0 — 300 MCM
	575	175 amps	#14 awg to 2/0	150 amps	#4 to 4/0
	400/50	175 amps	#14 awg to 2/0	225 amps	2/0 — 300 MCM
RTUA 100	*200	760 amps	#4 — 500 MCM	600 amps	4/0 to 350 MCM
	*230	760 amps	#4 — 500 MCM	400 amps	(1) 3/0 — 500 MCM & (1) 3/0 — 250 MCM
	460	335 amps	#6 — 350 MCM	225 amps	2/0 — 300 MCM
	575	175 amps	#14 awg to 2/0	225 amps	2/0 — 300 MCM
	400/50	335 amps	#6 — 350 MCM	225 amps	2/0 — 300 MCM
RTUA 110	*200	760 amps	#4 — 500 MCM	600 amps	4/0 to 350 MCM
	*230	760 amps	#4 — 500 MCM	600 amps	4/0 to 350 MCM
	460	335 amps	#6 — 350 MCM	225 amps	2/0 — 300 MCM
	575	175 amps	#14 awg to 2/0	225 amps	2/0 — 300 MCM
	400/50	335 amps	#6 — 350 MCM	400 amps	(1) 3/0 — 500 MCM & (1) 3/0 — 250 MCM
RTUA 125	*200	760 amps	#4 — 500 MCM	600 amps	4/0 to 350 MCM
	*230	760 amps	#4 — 500 MCM	600 amps	4/0 to 350 MCM
	460	335 amps	#6 — 350 MCM	400 amps	(1) 3/0 — 500 MCM & (1) 3/0 — 250 MCM
	575	335 amps	#6 — 350 MCM	225 amps	2/0 — 300 MCM
	400/50	335 amps	#6 — 350 MCM	400 amps	(1) 3/0 — 500 MCM & (1) 3/0 — 250 MCM

Notes:
*Unavailable on X-Line starts
1. Optional non-fused disconnect.
2. Copper wire only, sized per N.E.C., based on nameplate minimum circuit ampacity (MCA)
3. High condensing temperature option refers to leaving condenser water temperatures above 110 F.
4. Low temperature evaporator option refers to leaving chilled fluid temperatures less than 40 F.

Jobsite Connections

RTWA

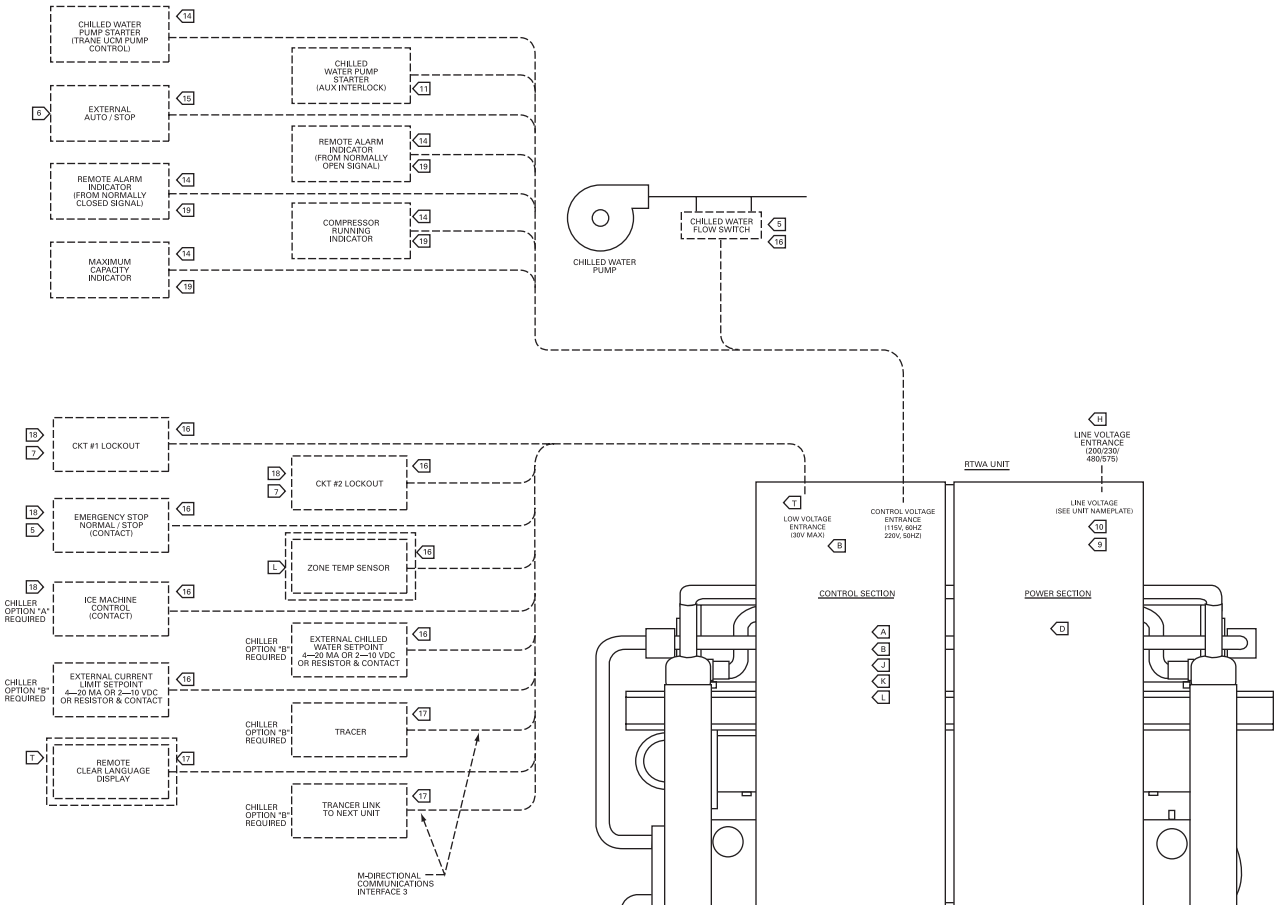

NOTES:

1. DASHED LINES INDICATE RECOMMENDED FIELD WIRING BY OTHERS. CHECK SALES ORDER TO DETERMINE IF WIRING IS REQUIRED FOR SPECIFIC OPTIONS.
2. ALL THREE PHASE MOTORS SUPPLIED WITH THE UNIT ARE PROTECTED UNDER PRIMARY SINGLE PHASE FAILURE CONDITIONS.
3. CAUTION - DO NOT ENERGIZE UNIT UNTIL CHECK OUT AND START-UP PROCEDURES HAVE BEEN COMPLETED.
4. THE FOLLOWING CAPABILITIES ARE OPTIONAL - THEY ARE IMPLEMENTED AND WIRED AS REQUIRED FOR A SPECIFIC SYSTEM APPLICATION.

A ICE-MACHINE CONTROL (CANNOT BE USED WITH OPT. L)
B COMMUNICATIONS INTERFACE
D WYE-DELTA CLOSED TRANSITION STARTER
E DELETED
H UNIT DISCONNECT, NON-FUSED
J CHILLED WATER RESET - RETURN WATER
K CHILLED WATER RESET - OUTDOOR AIR
L CHILLED WATER RESET - ZONE AIR (CANNOT BE USED WITH OPT. A)
O LOW AMBIENT LOCKOUT
S CHILLED WATER FLOW SWITCH (NOT REQUIRED FOR CHILLER PROTECTION)
T REMOTE CLEAR LANGUAGE DISPLAY. (BUFFER FOR DISPLAY LOCATED IN UNIT CONTROL PANEL.)

5. AUXILIARY CONTROLS FOR A CUSTOMER SPECIFIED OR INSTALLED LATCHING TRIPOUT. THE CHILLER WILL RUN NORMALLY WHEN THE CONTACT IS CLOSED AND TRIP THE CHILLER OFF ON MANUALLY RESETTABLE DIAGNOSTIC WHEN THE CONTACT OPENS. MANUAL RESET IS ACCOMPLISHED AT THE LOCAL OR REMOTE CLEAR LANGUAGE DISPLAY.
6. AUXILIARY CONTROLS FOR A CUSTOMER SPECIFIED OR INSTALLED REMOTE AUTO/STOP FUNCTION. THE CHILLER WILL RUN NORMALLY WHEN THE CONTACT IS CLOSED AND STOP THE CHILLER WHEN THE CONTACT IS OPEN. RE-CLOSURE OF THE CONTACT WILL PERMIT THE CHILLER TO AUTOMATICALLY RETURN TO NORMAL OPERATION. TO BE IN SERIES WITH WATER PUMP RELAY (5K21). NOTE: DO NOT USE CHILLED WATER PUMP TO STOP THE CHILLER.
7. NORMALLY OPEN CONTACTS FOR REMOTE SHUTDOWN OR REFRIGERANT CIRCUIT OPERATION. THE REFRIGERANT CIRCUIT WILL GO THRU A NORMAL SHUTDOWN WHEN THE CONTACTS ARE CLOSED AND WILL AUTOMATICALLY RESUME NORMAL START AND RUN MODES WHEN CONTACTS ARE OPEN.

WIRING

8. ALL CUSTOMER CONTROL CIRCUIT WIRING MUST HAVE A MINIMUM RATING OF 150 VOLTS.
9. ALL FIELD WIRING MUST BE IN ACCORDANCE WITH THE NATIONAL ELECTRICAL CODE (NEC), STATE, AND LOCAL REQUIREMENTS. OUTSIDE THE UNITED STATES, OTHER COUNTRIES APPLICABLE NATIONAL AND/OR LOCAL REQUIREMENTS SHALL APPLY.

REQUIRED WIRING

10. COPPER WIRE ONLY – SIZED PER N.E.C. – BASED ON NAMEPLATE MINIMUM CIRCUIT AMPACITY (MCA). SEE CUSTOMER WIRE SELECTION TABLE.
11. 2 WIRES, 115 VAC CIRCUIT. MINIMUM CONTACT RATING AT 115 VAC – 5.9 VA INRUSH. 1.3 VA SEALED.
12. DELETED

OPTIONAL WIRING:

14. 3 WIRES. 115 VAC CIRCUIT. SEPARATE 115 VAC POWER SUPPLY IS REQUIRED. LOAD NOT TO EXCEED 1150 VA INRUSH, 115 VA SEALED.
15. 2 WIRES. 115 VAC CIRCUIT. MINIMUM CONTACT RATING AT 115 VAC - 6.9 VA INRUSH, 1.3 VA SEALED.
16. 2 WIRES. 30 VOLT OR LESS CIRCUIT. DO NOT RUN IN CONDUIT WITH HIGHER VOLTAGE CIRCUITS. SEE CUSTOMER WIRE SELECTION TABLE.
17. SHIELDED TWISTED PAIR, 30 VOLT OR LESS CIRCUIT. MAXIMUM LENGTH 5000 FEET. DO NOT RUN IN CONDUIT WITH HIGHER VOLTAGE CIRCUITS. SEE CUSTOMER WIRE SELECTION TABLE. BELDON TYPE 8760 RECOMMENDED.
18. CUSTOMER SUPPLIED CONTACTS MUST BE COMPATIBLE WITH DRY CIRCUIT 12 VDC, 45 mA RESISTIVE LOAD. SILVER OR GOLD PLATED CONTACTS ARE RECOMMENDED.
19. CHILLER MODULE (1U1) RELAY OUTPUTS (K1, K2, K3) CAN BE PROGRAMMED TO PERFORM ALTERNATE FUNCTIONS, FUNCTION #1 IS SHOWN. SEE INSTALLATION, OPERATION AND MAINTENANCE MANUAL FOR DETAILS.

Jobsite Connections RTUA

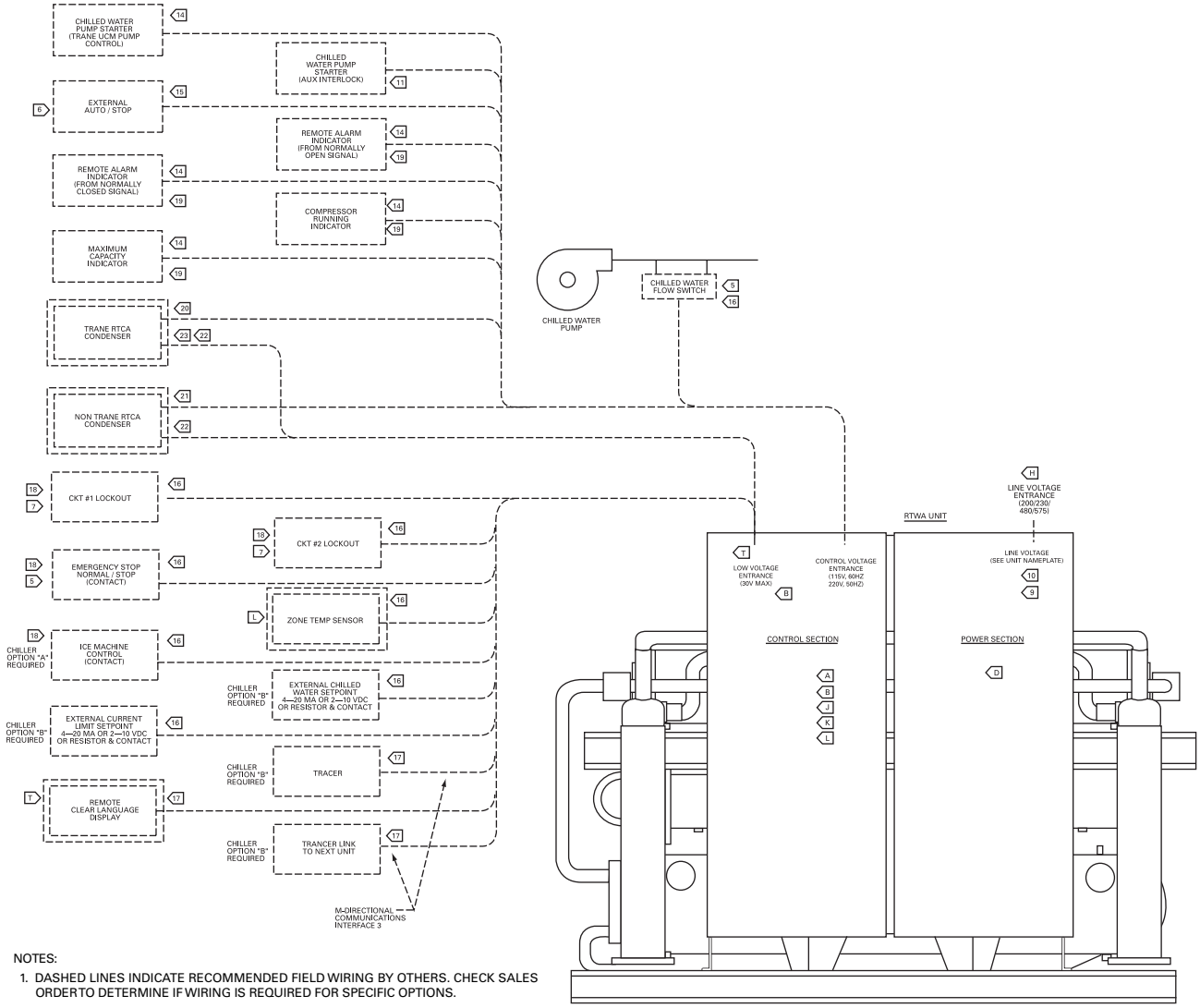

NOTES:

1. DASHED LINES INDICATE RECOMMENDED FIELD WIRING BY OTHERS. CHECK SALES ORDER TO DETERMINE IF WIRING IS REQUIRED FOR SPECIFIC OPTIONS.
2. ALL THREE PHASE MOTORS SUPPLIED WITH THE UNIT ARE PROTECTED UNDER PRIMARY SINGLE PHASE FAILURE CONDITIONS.
3. CAUTION - DO NOT ENERGIZE UNIT UNTIL CHECK OUT AND START-UP PROCEDURES HAVE BEEN COMPLETED.
4. THE FOLLOWING CAPABILITIES ARE OPTIONAL - THEY ARE IMPLEMENTED AND WIRED AS REQUIRED FOR A SPECIFIC SYSTEM APPLICATION.

A ICE-MACHINE CONTROL (CANNOT BE USED WITH OPT. L)
B COMMUNICATIONS INTERFACE
D WYE-DELTA CLOSED TRANSITION STARTER
E DELETED
H UNIT DISCONNECT, NON-FUSED
J CHILLED WATER RESET - RETURN WATER
K CHILLED WATER RESET - OUTDOOR AIR
L CHILLED WATER RESET - ZONE AIR (CANNOT BE USED WITH OPT. A)
O LOW AMBIENT LOCKOUT
S CHILLED WATER FLOW SWITCH (NOT REQUIRED FOR CHILLER PROTECTION)
T REMOTE CLEAR LANGUAGE DISPLAY. (BUFFER FOR DISPLAY LOCATED IN UNIT CONTROL PANEL.)

5 AUXILIARY CONTROLS FOR A CUSTOMER SPECIFIED OR INSTALLED LATCHING TRIPOUT. THE CHILLER WILL RUN NORMALLY WHEN THE CONTACT IS CLOSED AND TRIP THE CHILLER OFF ON MANUALLY RESETTABLE DIAGNOSTIC WHEN THE CONTACT OPENS. MANUAL RESET IS ACCOMPLISHED AT THE LOCAL OR REMOTE CLEAR LANGUAGE DISPLAY.

6 AUXILIARY CONTROLS FOR A CUSTOMER SPECIFIED OR INSTALLED REMOTE AUTO/ STOP FUNCTION. THE CHILLER WILL RUN NORMALLY WHEN THE CONTACT IS CLOSED AND STOP THE CHILLER WHEN THE CONTACT IS OPEN. RE-CLOSURE OF THE CONTACT WILL PERMIT THE CHILLER TO AUTOMATICALLY RETURN TO NORMAL OPERATION. TO BE IN SERIES WITH WATER PUMP RELAY (5K21). NOTE: DO NOT USE THE CHILLED WATER PUMP TO STOP THE CHILLER.

7 NORMALLY OPEN CONTACTS FOR REMOTE SHUTDOWN OR REFRIGERANT CIRCUIT OPERATION. THE REFRIGERANT CIRCUIT WILL GO THRU A NORMAL SHUTDOWN WHEN THE CONTACTS ARE CLOSED AND WILL AUTOMATICALLY RESUME NORMAL START AND RUN MODES WHEN CONTACTS ARE OPEN.

WIRING

8 ALL CUSTOMER CONTROL CIRCUIT WIRING MUST HAVE A MINIMUM RATING OF 150 VOLTS.

9. ALL FIELD WIRING MUST BE IN ACCORDANCE WITH THE NATIONAL ELECTRICAL CODE (NEC), STATE, AND LOCAL REQUIREMENTS. OUTSIDE THE UNITED STATES, OTHER COUNTRIES APPLICABLE NATIONAL AND/OR LOCAL REQUIREMENTS SHALL APPLY.

REQUIRED WIRING

10 COPPER WIRE ONLY – SIZED PER N.E.C. – BASED ON NAMEPLATE MINIMUM CIRCUIT AMPACITY (MCA). SEE CUSTOMER WIRE SELECTION TABLE.

11 2 WIRES, 115 VAC CIRCUIT. MINIMUM CONTACT RATING AT 115 VAC – 5.9 VA INRUSH. 1.3 VA SEALED.

OPTIONAL WIRING:

14 3 WIRES. 115 VAC CIRCUIT. SEPARATE 115 VAC POWER SUPPLY IS REQUIRED. LOAD NOT TO EXCEED 1150 VA INRUSH, 115 VA SEALED.

15 2 WIRES. 115 VAC CIRCUIT. MINIMUM CONTACT RATING AT 115 VAC - 6.9 VA INRUSH, 1.3 VA SEALED.

16 2 WIRES. 30 VOLT OR LESS CIRCUIT. DO NOT RUN IN CONDUIT WITH HIGHER VOLTAGE CIRCUITS. SEE CUSTOMER WIRE SELECTION TABLE.

17 SHIELDED TWISTED PAIR, 30 VOLT OR LESS CIRCUIT. MAXIMUM LENGTH 5000 FEET. DO NOT RUN IN CONDUIT WITH HIGHER VOLTAGE CIRCUITS. SEE CUSTOMER WIRE SELECTION TABLE. BELDON TYPE 8760 RECOMMENDED.

18 CUSTOMER SUPPLIED CONTACTS MUST BE COMPATIBLE WITH DRY CIRCUIT 12 VDC, 45 mA RESISTIVE LOAD. SILVER OR GOLD PLATED CONTACTS ARE RECOMMENDED.

19 CHILLER MODULE (1U1) RELAY OUTPUTS (K1, K2, K3) CAN BE PROGRAMMED TO PERFORM ALTERNATE FUNCTIONS, FUNCTION #1 IS SHOWN. SEE INSTALLATION, OPERATION AND MAINTENANCE MANUAL FOR DETAILS.

20 9 WIRES, 115 VAC CIRCUIT. USE #16 AWG MINIMUM.

21 3 WIRES, 115 VAC CIRCUIT. MINIMUM CONTACT RATING AT 115 VAC - 180 VA INRUSH, 1150 VA SEALED.

22 1 RUNS OF 8 CONDUCTOR #22 AWG 300V 80 C, 100% SHIELDED, RECOMMEND BELDON 9305 OR EQUIVALENT. OR 3 RUNS OF 2 CONDUCTOR #18 AWG 300V 80 C, 100% SHIELDED, RECOMMENDED BELDEN 8780 OR EQUIVALENT.

23 1 RUNS OF 8 CONDUCTOR #22 AWG 300V 80 C, 100% SHIELDED, RECOMMEND BELDON 9305 OR EQUIVALENT. OR 4 RUNS OF 2 CONDUCTOR #18 AWG 300V 80 C, 100% SHIELDED, RECOMMENDED BELDEN 8780 OR EQUIVALENT.

Wiring Diagrams

RTWA

NOTES:

1. DASHED LINES INDICATE RECOMMENDED FIELD WIRING BY OTHERS. PHANTOM LINES INDICATE ALTERNATE CIRCUITRY OR AVAILABLE SALES OPTION. CHECK SALES ORDER TO DETERMINE IF WIRING IS REQUIRED FOR SPECIFIC OPTIONS.
2. ALL THREE PHASE MOTORS SUPPLIED WITH THE UNIT ARE PROTECTED UNDER PRIMARY SINGLE PHASE FAILURE CONDITIONS.
3. CAUTION - DO NOT ENERGIZE UNIT UNTIL CHECK OUT AND START-UP PROCEDURES HAVE BEEN COMPLETED.
4. SEE INSERT "A" FOR RESISTOR CONNECTIONS TO PROGRAM AN EXTERNAL CHILLED WATER SETPOINT WHEN 4 - 20 mA OR A 2 - 10 VDC SIGNAL IS NOT USED. SEE THE OPERATORS MANUAL FOR RESISTOR VALUES.

5 SEE INSERT "B" FOR RESISTOR CONNECTIONS TO PROGRAM AN EXTERNAL CURRENT LIMIT SETPOINT WHEN 4 - 20 mA OR A 2 - 10 VDC SIGNAL IS NOT USED. SEE THE OPERATORS MANUAL FOR RESISTOR VALUES.

6. SEE INSERT "C" FOR CONTACTS (IN PLACE OF THE ZONE TEMP. SENSOR) FOR OPTIONAL ICE MACHINE CONTROL - OPTION "A".
7. THE FOLLOWING CAPABILITIES ARE OPTIONAL - THEY ARE IMPLEMENTED AND WIRED AS REQUIRED FOR A SPECIFIC SYSTEM APPLICATION.

A ICE-MACHINE CONTROL (CANNOT BE USED WITH OPT. L)

B COMMUNICATIONS INTERFACE

D WYE-DELTA CLOSED TRANSITION STARTER

E DELETED

H UNIT DISCONNECT, NON-FUSED

I CHILLED WATER RESET - RETURN WATER

K CHILLED WATER RESET - OUTDOOR AIR

L CHILLED WATER RESET - ZONE AIR (CANNOT BE USED WITH OPT. A)

O LOW AMBIENT LOCKOUT

S CHILLED WATER FLOW SWITCH (NOT REQUIRED FOR CHILLER PROTECTION)

T REMOTE CLEAR LANGUAGE DISPLAY (BUFFER FOR DISPLAY LOCATED IN UNIT CONTROL PANEL)

WIRING AND CONTACT REQUIREMENTS:

20. ALL FIELD WIRING MUST BE IN ACCORDANCE WITH THE NATIONAL ELECTRICAL CODE (NEC), STATE, AND LOCAL REQUIREMENTS. OUTSIDE THE UNITED STATES, OTHER COUNTRIES APPLICABLE NATIONAL AND/OR LOCAL REQUIREMENTS SHALL APPLY.

21 DELETED

23 CUSTOMER SUPPLIED CONTACTS MUST BE COMPATIBLE WITH DRY CIRCUIT 12 VDC, 45 mA RESISTIVE LOAD. SILVER OR GOLD PLATED CONTACTS ARE RECOMMENDED.

24 30 VOLT OR LESS CIRCUIT. DO NOT RUN IN CONDUIT WITH HIGHER VOLTAGE CIRCUITS. USE #14-18 AWG. SEE SELECTION TABLE.

25 MINIMUM PILOT DUTY CONTACT RATING AT 115 VAC; 6.9 VA INRUSH, 1.3 VA SEALED.

26 FIELD WIRED ELECTRICAL LOADING IS NOT TO EXCEED THE FOLLOWING RATINGS:

TERMINALS	DEVICE	VOLTAGE	SEALED VA	INRUSH VA
1U1-TB4-2,1	1U1K1,NO	115	115	1150*
1U1-TB4-3	1U1K1,NC	115	115	1150*
1U1-TB4-5,4	1U1K2,NO	115	115	1150*
1U1-TB4-6,7	1U1K3,NC	115	115	1150*
1U1-TB4-8,9	1U1K2,NO	115	115	1150*
1U1-TB4-10,11	1U1K3,NC	115	115	1150*

*STANDARD PILOT DUTY RATING (35% POWER FACTOR).

27 IF EXTERNAL CIRCUIT LOCKOUT IS USED ON CKT 1 CUT JUMPER W7 ON CIRCUIT #1 AND SPLICE 48A AND 488 TO THE INDIVIDUAL CUT ENDS OF THE JUMPER. FOR CIRCUIT #2 CUT JUMPER W4 AND SPLICE 48A AND 488 TO THE INDIVIDUAL CUT ENDS OF THE JUMPER.

28 AS SHIPPED 380/415 VOLT UNIT TRANSFORMER 1T1 IS WIRED FOR 415 VOLT OPERATION. IF UNIT IS TO BE OPERATED ON A 380 VOLT POWER SUPPLY, RE-CONNECT AS SHOWN IN INSET "D". REPROGRAM "UNIT LINE VOLTAGE" IN SERVICE SETTING MENU OF CLEAR LANGUAGE DISPLAY FROM 415 TO 380.

29 K1, K2, K3 RELAY OUTPUTS CAN BE PROGRAMED TO PERFORM ALTERNATE FUNCTIONS. SEE INSTALLATION, OPERATION, AND MAINTENANCE MANUAL FOR DETAILS, FUNCTION #1.

30 CHILLED WATER PUMP CONTROL FROM TRANE UNIT UCM MODULE CHILLED WATER PUMP IS REQUIRED TO OPERATE A MINIMUM OF ONE MINUTE AFTER A COMMAND TO TERMINATE CHILLER OPERATION (UCM WILL PROVIDE TIME DELAY CONTACTS). CHILLED WATER SYSTEM DEMAND SWITCH (532) IS CONNECTED TO THE UCM EXTERNAL AUTO/ STOP INPUT.

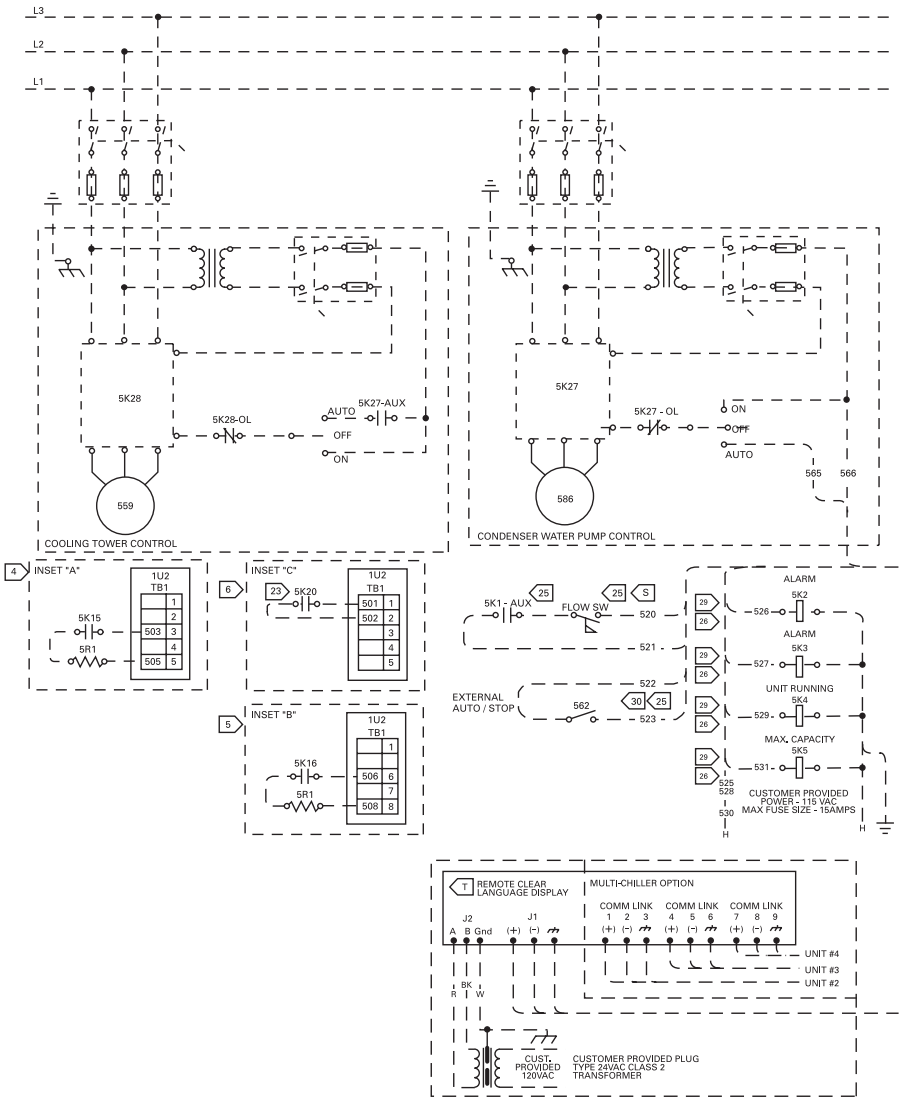

⚠ WARNING

HAZARDOUS VOLTAGE!

DISCONNECT ALL ELECTRIC POWER INCLUDING REMOTE DISCONNECTS AND FOLLOW LOCK OUT AND TAG PROCEDURES BEFORE SERVICING. INSURE THAT ALL MOTOR CAPACITORS HAVE DISCHARGED STORED VOLTAGE. UNITS WITH VARIABLE SPEED DRIVE, REFER TO DRIVE INSTRUCTIONS FOR CAPACITOR DISCHARGE.

FAILURE TO DO THE ABOVE BEFORE SERVICING COULD RESULT IN DEATH OR SERIOUS INJURY.

⚠ AVERTISSEMENT

TENSION DANGEREUSE!

COUPER TOUTES LES TENSIONS ET OUVRIR LES SECTIONNEURS À DISTANCE, PUIS SUIVRE LES PROCÉDURES DE VERROUILLAGE ET DES ÉTIQUETTES AVANT TOUTE INTERVENTION. VÉRIFIER QUE TOUS LES CONDENSATEURS DES MOTEURS SONT DÉCHARGÉS. DANS LE CAS D'UNITÉS COMPORTANT DES ENTRAÎNEMENTS À VITESSE VARIABLE, SE REPORTER AUX INSTRUCTIONS DE L'ENTRAÎNEMENT POUR DÉCHARGER LES CONDENSATEURS.

NE PAS RESPECTER CES MESURES DE PRÉCAUTION PEUT ENTRAÎNER DES BLESSURES GRAVES POUVANT ÊTRE MORTELLES.

⚠ ADVERTENCIA

¡VOLTAJE PELIGROSO!

DESCONECTE TODA LA ENERGÍA ELÉCTRICA, INCLUSO LAS DESCONEXIONES REMOTAS Y SIGA LOS PROCEDIMIENTOS DE CIERRE Y ETIQUETADO ANTES DE PROCEDER AL SERVICIO. ASEGÚRESE DE QUE TODOS LOS CAPACITORES DEL MOTOR HAYAN DESCARGADO EL VOLTAJE ALMACENADO. PARA LAS UNIDADES CON EJE DE DIRECCIÓN DE VELOCIDAD VARIABLE, CONSULTE LAS INSTRUCCIONES PARA LA DESCARGA DEL CONDENSADOR.

EL NO REALIZAR LO ANTERIORMENTE INDICADO, PODRÍA OCASIONAR LA MUERTE O SERIAS LESIONES PERSONALES.

Wiring Diagrams

RTWA

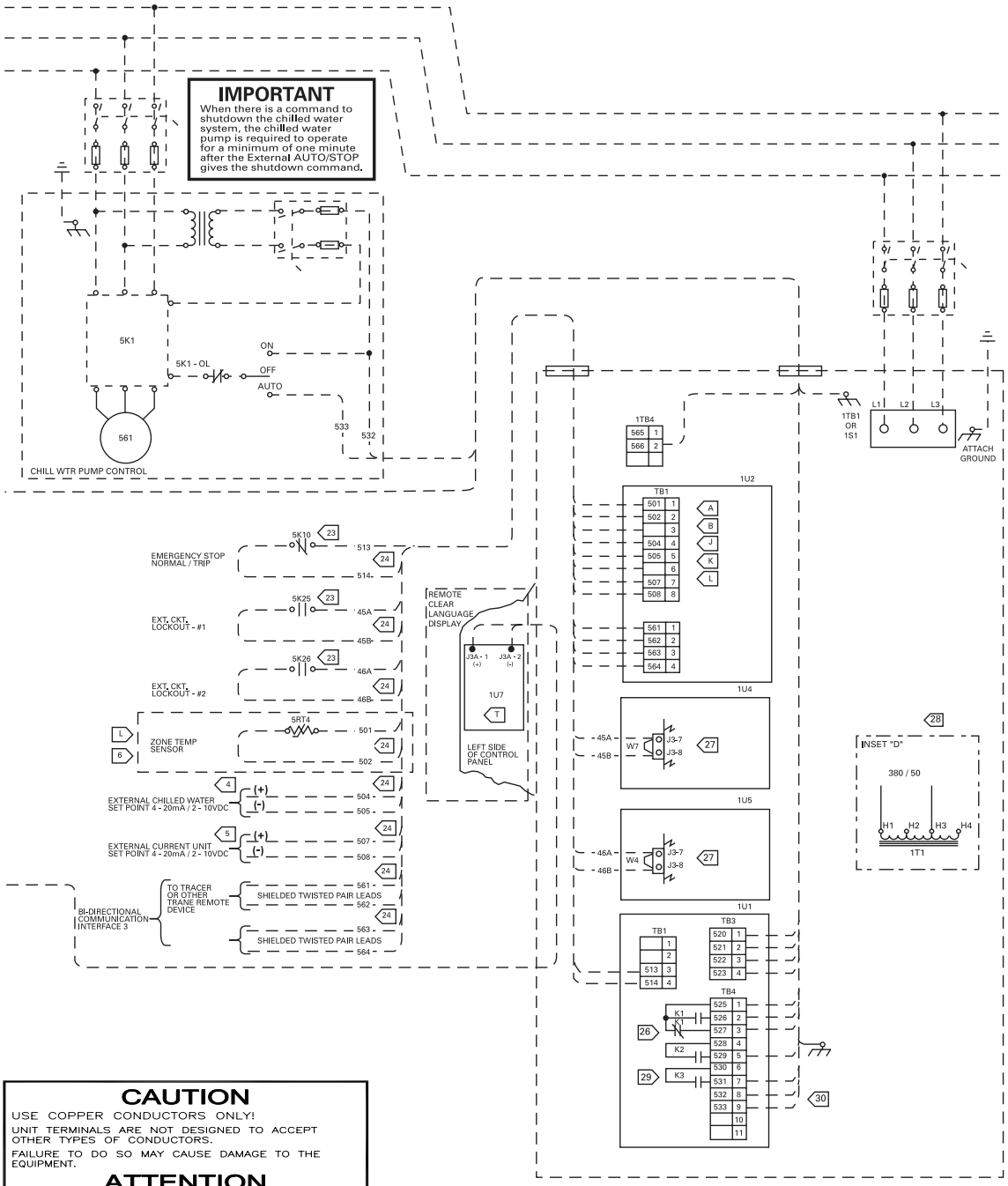

CAUTION

USE COPPER CONDUCTORS ONLY!

UNIT TERMINALS ARE NOT DESIGNED TO ACCEPT OTHER TYPES OF CONDUCTORS.

FAILURE TO DO SO MAY CAUSE DAMAGE TO THE EQUIPMENT.

ATTENTION

N'UTILISER QUE DES CONDUCTEURS EN CUIVRE!

LES BORNES DE L'UNITÉ NE SONT PAS CONÇUES POUR RECEVOIR D'AUTRES TYPES DE CONDUCTEURS.

L'UTILISATION DE TOUT AUTRE CONDUCTEUR PEUT ENDOMMAGER L'ÉQUIPEMENT.

PRECAUCIÓN

¡UTILICE ÚNICAMENTE CONDUCTORES DE COBRE!

LAS TERMINALES DE LA UNIDAD NO ESTÁN DISEÑADAS PARA ACEPTAR OTROS TIPOS DE CONDUCTORES.

SI NO LO HACE, PUEDE OCASIONAR DAÑO AL EQUIPO.

Wiring Diagrams

RTUA with RTCA

NOTES:

1. DASHED LINES INDICATE RECOMMENDED FIELD WIRING BY OTHERS. PHANTOM LINES INDICATE ALTERNATE CIRCUITRY OR AVAILABLE SALES OPTION. CHECK SALES ORDER TO DETERMINE IF WIRING IS REQUIRED FOR SPECIFIC OPTIONS.
2. ALL THREE PHASE MOTORS SUPPLIED WITH THE UNIT ARE PROTECTED UNDER PRIMARY SINGLE PHASE FAILURE CONDITIONS.
3. CAUTION - DO NOT ENERGIZE UNIT UNTIL CHECK OUT AND START-UP PROCEDURES HAVE BEEN COMPLETED.

4 SEE INSERT "A" FOR RESISTOR CONNECTIONS TO PROGRAM AN EXTERNAL CHILLED WATER SETPOINT WHEN 4 - 20 mA OR A 2 - 10 VDC SIGNAL IS NOT USED. SEE THE OPERATORS MANUAL FOR RESISTOR VALUES.

5 SEE INSERT "B" FOR RESISTOR CONNECTIONS TO PROGRAM AN EXTERNAL CURRENT LIMIT SETPOINT WHEN 4 - 20 mA OR A 2 - 10 VDC SIGNAL IS NOT USED. SEE THE OPERATORS MANUAL FOR RESISTOR VALUES.

6 SEE INSERT "C" FOR CONTACTS (IN PLACE OF THE ZONE TEMP. SENSOR) FOR OPTIONAL ICE MACHINE CONTROL - OPTION "A."

7. THE FOLLOWING CAPABILITIES ARE OPTIONAL - THEY ARE IMPLEMENTED AND WIRED AS REQUIRED FOR A SPECIFIC SYSTEM APPLICATION.

A ICE-MACHINE CONTROL
B COMMUNICATIONS INTERFACE
D WYE-DELTA CLOSED TRANSITION STARTER
E CONTROL POWER TRANSFORMER
H UNIT DISCONNECT, NON-FUSED
J CHILLED WATER RESET - RETURN WATER
K CHILLED WATER RESET - OUTDOOR AIR
O LOW AMBIENT LOCKOUT
S CHILLED WATER FLOW SWITCH (NOT REQUIRED FOR CHILLER PROTECTION)
T REMOTE CLEAR LANGUAGE DISPLAY (BUFFER FOR DISPLAY LOCATED IN UNIT CONTROL PANEL)

WIRING AND CONTACT REQUIREMENTS:

20 ALL FIELD WIRING MUST BE IN ACCORDANCE WITH THE NATIONAL ELECTRICAL CODE (NEC), STATE, AND LOCAL REQUIREMENTS. OUTSIDE THE UNITED STATES, OTHER COUNTRIES APPLICABLE NATIONAL AND/OR LOCAL REQUIREMENTS SHALL APPLY.

23 CUSTOMER SUPPLIED CONTACTS MUST BE COMPATIBLE WITH DRY CIRCUIT 12 VDC, 45 mA RESISTIVE LOAD. SILVER OR GOLD PLATED CONTACTS ARE RECOMMENDED.

24 30 VOLT OR LESS CIRCUIT. DO NOT RUN IN CONDUIT WITH HIGHER VOLTAGE CIRCUITS. USE #14-18 AWG. SEE SELECTION TABLE.

25 MINIMUM PILOT DUTY CONTACT RATING AT 115 VAC; 6.9 VA INRUSH, 1.3 VA SEALED.

26 FIELD WIRED ELECTRICAL LOADING IS NOT TO EXCEED THE FOLLOWING RATINGS:

TERMINALS	DEVICE	VOLTAGE	SEALED VA	INRUSH VA
1U1-TB4-1,2	1U1K1,NO	115	180	1150*
1U1-TB4-3	1U1K1,NC	115	180	1150*
1U1-TB4-5,4	1U1K2,NO	115	180	1150*
1U1-TB4-6,7	1U1K3,NC	115	180	1150*
1U1-TB4-8,9	1U1K2,NO	115	250	1150*
1U1-TB4-10,11	1U1K3,NC	115	180	1150*

*STANDARD PILOT DUTY RATING (35% POWER FACTOR).

27 IF EXTERNAL CIRCUIT LOCKOUT IS USED ON CKT 1 CUT JUMPER W7 ON CIRCUIT #1 AND SPLICE 48A AND 488 TO THE INDIVIDUAL CUT ENDS OF THE JUMPER. FOR CIRCUIT #2 CUT JUMPER W4 AND SPLICE 48A AND 488 TO THE INDIVIDUAL CUT ENDS OF THE JUMPER.

28 AS SHIPPED 380/415 VOLT UNIT TRANSFORMER 1T1 IS WIRED FOR 415 VOLT OPERATION. IF UNIT IS TO BE OPERATED ON A 380 VOLT POWER SUPPLY, RE-CONNECT AS SHOWN IN INSET "D." REPROGRAM "UNIT LINE VOLTAGE" IN SERVICE SETTING MENU OF CLEAR LANGUAGE DISPLAY FROM 415 TO 380.

29 K1, K2, K3 RELAY OUTPUTS CAN BE PROGRAMED TO PERFORM ALTERNATE FUNCTIONS. SEE INSTALLATION, OPERATION, AND MAINTENANCE MANUAL FOR DETAILS, FUNCTION #1 IS SHOWN.

30 CHILLED WATER PUMP CONTROL FROM TRANE UNIT UCM MODULE CHILLED WATER PUMP IS REQUIRED TO OPERATE A MINIMUM OF ONE MINUTE AFTER A COMMAND TO TERMINATE CHILLER OPERATION (UCM WILL PROVIDE TIME DELAY CONTACTS). CHILLED WATER SYSTEM DEMAND SWITCH (532) IS CONNECTED TO THE UCM EXTERNAL AUTO/STOP INPUT.

31 RECOMMEND USING 1 RUN OF 8 CONDUCTORS #22 AND 300V 80 C, 100% SHIELDED WITH DRAIN WIRE (BELDON 8305 OR EQUIVALENT). MAX. LENGTH FOR #22 IS 500 FT. USE 4 RUNS OF 2 CONDUCTOR #18 AND 100% SHIELDED WITH DRAIN WIRE FOR RUNS UP TO 1000 FT. (BELDON 8780 OR EQUIVALENT). DO NOT RUN IN CONDUIT WITH HIGHER VOLTAGE CIRCUITS.

32 9 WIRES, 115 VAC CIRCUIT. USE #16 AWG MINIMUM.

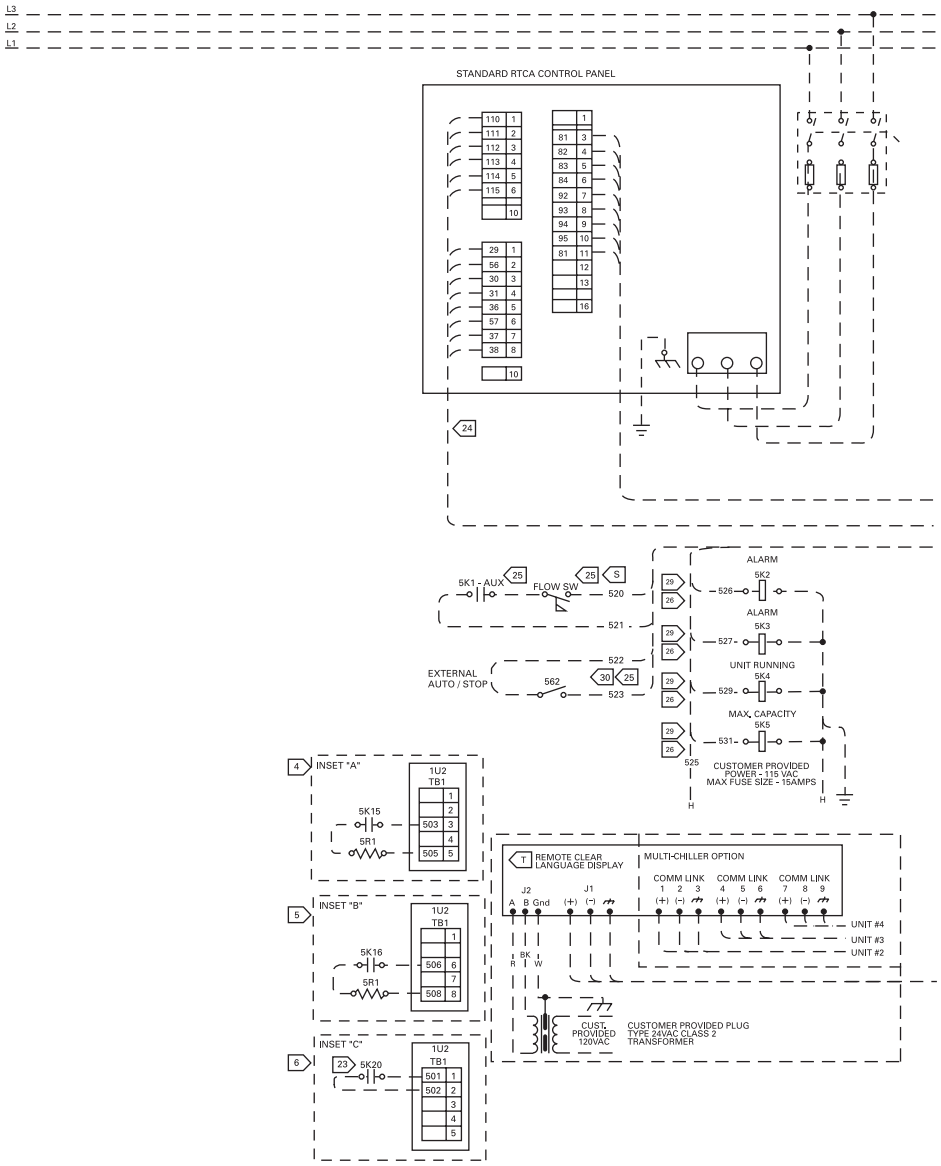

⚠ WARNING

HAZARDOUS VOLTAGE!

DISCONNECT ALL ELECTRIC POWER INCLUDING REMOTE DISCONNECTS AND FOLLOW LOCK OUT AND TAG PROCEDURES BEFORE SERVICING. INSURE THAT ALL MOTOR CAPACITORS HAVE DISCHARGED STORED VOLTAGE. UNITS WITH VARIABLE SPEED DRIVE, REFER TO DRIVE INSTRUCTIONS FOR CAPACITOR DISCHARGE.

FAILURE TO DO THE ABOVE BEFORE SERVICING COULD RESULT IN DEATH OR SERIOUS INJURY.

⚠ AVERTISSEMENT

TENSION DANGEREUSE!

COUPER TOUTES LES TENSIONS ET OUVRIR LES SECTIONNEURS À DISTANCE, PUIS SUIVRE LES PROCÉDURES DE VERROUILLAGE ET DES ÉTIQUETTES AVANT TOUTE INTERVENTION. VÉRIFIER QUE TOUS LES CONDENSATEURS DES MOTEURS SONT DÉCHARGÉS. DANS LE CAS D'UNITÉS COMPORTANT DES ENTRAÎNEMENTS À VITESSE VARIABLE, SE REPORTER AUX INSTRUCTIONS DE L'ENTRAÎNEMENT POUR DÉCHARGER LES CONDENSATEURS.

NE PAS RESPECTER CES MESURES DE PRÉCAUTION PEUT ENTRAÎNER DES BLESSURES GRAVES POUVANT ÊTRE MORTELLES.

⚠ ADVERTENCIA

¡VOLTAJE PELIGROSO!

DESCONECTE TODA LA ENERGÍA ELÉCTRICA, INCLUSO LAS DESCONEXIONES REMOTAS Y SIGA LOS PROCEDIMIENTOS DE CIERRE Y ETIQUETADO ANTES DE PROCEDER AL SERVICIO. ASEGÚRESE DE QUE TODOS LOS CAPACITORES DEL MOTOR HAYAN DESCARGADO EL VOLTAJE ALMACENADO. PARA LAS UNIDADES CON EJE DE DIRECCIÓN DE VELOCIDAD VARIABLE, CONSULTE LAS INSTRUCCIONES PARA LA DESCARGA DEL CONDENSADOR.

EL NO REALIZAR LO ANTERIORMENTE INDICADO, PODRÍA OCASIONAR LA MUERTE O SERIAS LESIONES PERSONALES.

Wiring Diagrams

RTUA with RTCA

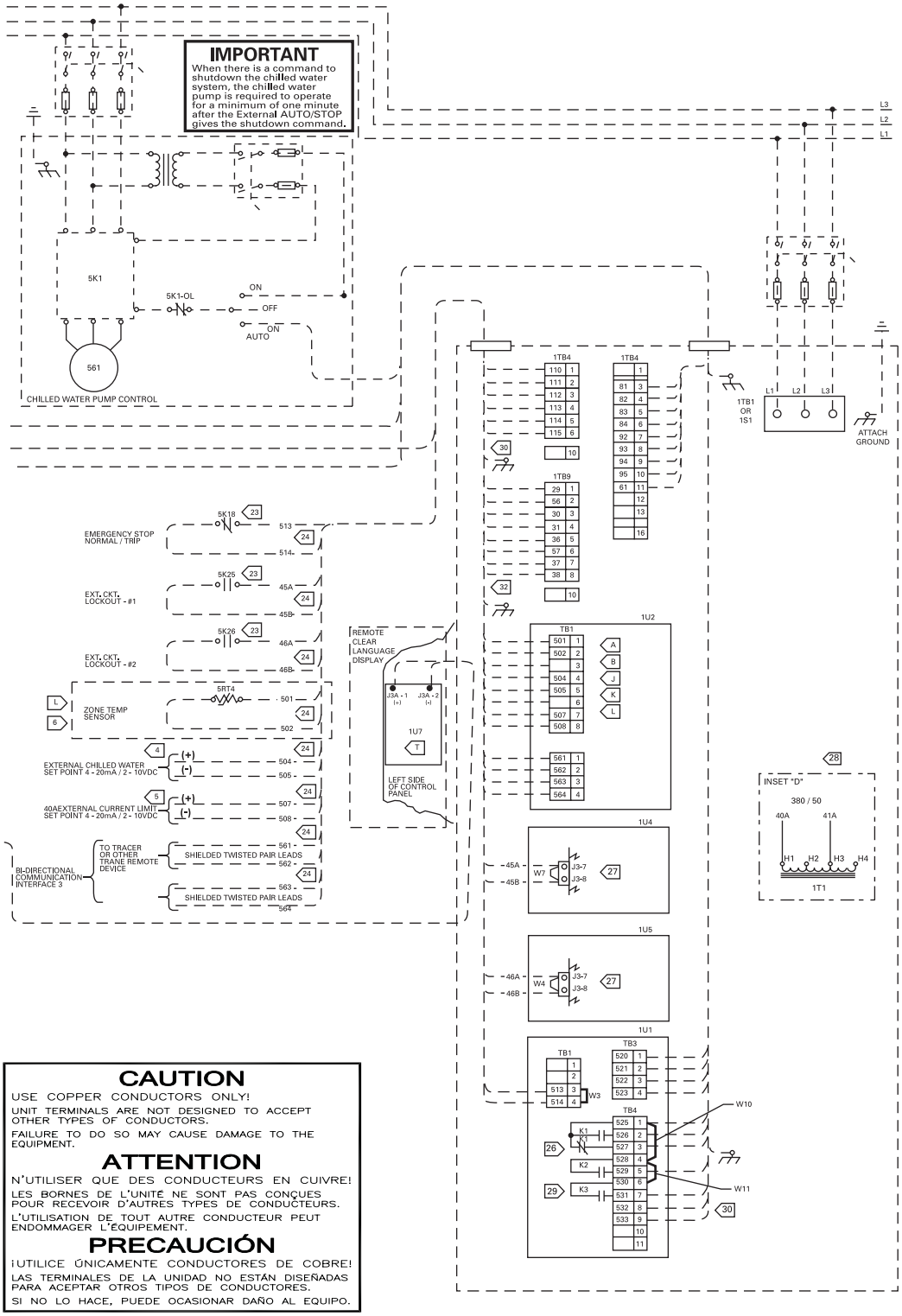

CAUTION

USE COPPER CONDUCTORS ONLY!

UNIT TERMINALS ARE NOT DESIGNED TO ACCEPT OTHER TYPES OF CONDUCTORS.

FAILURE TO DO SO MAY CAUSE DAMAGE TO THE EQUIPMENT.

ATTENTION

N'UTILISER QUE DES CONDUCTEURS EN CUIVRE!

LES BORNES DE L'UNITÉ NE SONT PAS CONÇUES POUR RECEVOIR D'AUTRES TYPES DE CONDUCTEURS.

L'UTILISATION DE TOUT AUTRE CONDUCTEUR PEUT ENDOMMAGER L'ÉQUIPEMENT.

PRECAUCIÓN

¡UTILICE ÚNICAMENTE CONDUCTORES DE COBRE!

LAS TERMINALES DE LA UNIDAD NO ESTÁN DISEÑADAS PARA ACEPTAR OTROS TIPOS DE CONDUCTORES.

SI NO LO HACE, PUEDE OCASIONAR DAÑO AL EQUIPO.

Wiring Diagrams

RTUA with non-Trane condenser

NOTES:

1. DASHED LINES INDICATE RECOMMENDED FIELD WIRING BY OTHERS. PHANTOM LINES INDICATE ALTERNATE CIRCUITRY OR AVAILABLE SALES OPTION. CHECK SALES ORDER TO DETERMINE IF WIRING IS REQUIRED FOR SPECIFIC OPTIONS.
2. ALL THREE PHASE MOTORS SUPPLIED WITH THE UNIT ARE PROTECTED UNDER PRIMARY SINGLE PHASE FAILURE CONDITIONS.
3. CAUTION - DO NOT ENERGIZE UNIT UNTIL CHECK OUT AND START-UP PROCEDURES HAVE BEEN COMPLETED.

4 SEE INSERT "A" FOR RESISTOR CONNECTIONS TO PROGRAM AN EXTERNAL CHILLED WATER SETPOINT WHEN 4 - 20 mA OR A 2 - 10 VDC SIGNAL IS NOT USED. SEE THE OPERATORS MANUAL FOR RESISTOR VALUES.

5 SEE INSERT "B" FOR RESISTOR CONNECTIONS TO PROGRAM AN EXTERNAL CURRENT LIMIT SETPOINT WHEN 4 - 20 mA OR A 2 - 10 VDC SIGNAL IS NOT USED. SEE THE OPERATORS MANUAL FOR RESISTOR VALUES.

6 SEE INSERT "C" FOR CONTACTS (IN PLACE OF THE ZONE TEMP. SENSOR) FOR OPTIONAL ICE MACHINE CONTROL - OPTION "A".

7. THE FOLLOWING CAPABILITIES ARE OPTIONAL - THEY ARE IMPLEMENTED AND WIRED AS REQUIRED FOR A SPECIFIC SYSTEM APPLICATION.

A ICE-MACHINE CONTROL
B COMMUNICATIONS INTERFACE
D WYE-DELTA CLOSED TRANSITION STARTER
E CONTROL POWER TRANSFORMER
H UNIT DISCONNECT, NON-FUSED
J CHILLED WATER RESET - RETURN WATER
K CHILLED WATER RESET - OUTDOOR AIR
O LOW AMBIENT LOCKOUT
S CHILLED WATER FLOW SWITCH (NOT REQUIRED FOR CHILLER PROTECTION)
T REMOTE CLEAR LANGUAGE DISPLAY (BUFFER FOR DISPLAY LOCATED IN UNIT CONTROL PANEL)

WIRING AND CONTACT REQUIREMENTS:

20 ALL FIELD WIRING MUST BE IN ACCORDANCE WITH THE NATIONAL ELECTRICAL CODE (NEC), STATE, AND LOCAL REQUIREMENTS. OUTSIDE THE UNITED STATES, OTHER COUNTRIES APPLICABLE NATIONAL AND/OR LOCAL REQUIREMENTS SHALL APPLY.

23 CUSTOMER SUPPLIED CONTACTS MUST BE COMPATIBLE WITH DRY CIRCUIT 12 VDC, 45 mA RESISTIVE LOAD. SILVER OR GOLD PLATED CONTACTS ARE RECOMMENDED.

24 30 VOLT OR LESS CIRCUIT. DO NOT RUN IN CONDUIT WITH HIGHER VOLTAGE CIRCUITS. USE #14-18 AWG. SEE SELECTION TABLE.

25 MINIMUM PILOT DUTY CONTACT RATING AT 115 VAC; 6.9 VA INRUSH, 1.3 VA SEALED.

26 FIELD WIRED ELECTRICAL LOADING IS NOT TO EXCEED THE FOLLOWING RATINGS:

TERMINALS	DEVICE	VOLTAGE	SEALED VA	INRUSH VA
1U1-TB4-1,2	1U1K1,NO	115	180	1150*
1U1-TB4-3	1U1K1,NC	115	180	1150*
1U1-TB4-5,4	1U1K2,NO	115	180	1150*
1U1-TB4-6,7	1U1K3,NC	115	180	1150*
1U1-TB4-8,9	1U1K2,NO	115	250	1150*
1U1-TB4-10,11	1U1K3,NC	115	180	1150*

*STANDARD PILOT DUTY RATING (35% POWER FACTOR).

27 IF EXTERNAL CIRCUIT LOCKOUT IS USED ON CKT 1 CUT JUMPER W7 ON CIRCUIT #1 AND SPLICE 48A AND 488 TO THE INDIVIDUAL CUT ENDS OF THE JUMPER. FOR CIRCUIT #2 CUT JUMPER W4 AND SPLICE 48A AND 488 TO THE INDIVIDUAL CUT ENDS OF THE JUMPER.

28 AS SHIPPED 380/415 VOLT UNIT TRANSFORMER 1T1 IS WIRED FOR 415 VOLT OPERATION. IF UNIT IS TO BE OPERATED ON A 380 VOLT POWER SUPPLY, RE-CONNECT AS SHOWN IN INSET "D". REPROGRAM "UNIT LINE VOLTAGE" IN SERVICE SETTING MENU OF CLEAR LANGUAGE DISPLAY FROM 415 TO 380.

29 K1, K2, K3 RELAY OUTPUTS CAN BE PROGRAMED TO PERFORM ALTERNATE FUNCTIONS. SEE INSTALLATION, OPERATION, AND MAINTENANCE MANUAL FOR DETAILS, FUNCTION #1 IS SHOWN.

30 CHILLED WATER PUMP CONTROL FROM TRANE UNIT UCM MODULE CHILLED WATER PUMP IS REQUIRED TO OPERATE A MINIMUM OF ONE MINUTE AFTER A COMMAND TO TERMINATE CHILLER OPERATION (UCM WILL PROVIDE TIME DELAY CONTACTS). CHILLED WATER SYSTEM DEMAND SWITCH (532) IS CONNECTED TO THE UCM EXTERNAL AUTO/STOP INPUT.

31 RECOMMEND USING 1 RUN OF 8 CONDUCTORS #22 AND 300V 80 C, 100% SHIELDED WITH DRAIN WIRE (BELDON 8305 OR EQUIVALENT). MAX. LENGTH FOR #22 IS 500 FT. USE 4 RUNS OF 2 CONDUCTOR #18 AND 100% SHIELDED WITH DRAIN WIRE FOR RUNS UP TO 1000 FT. (BELDEN 8780 OR EQUIVALENT). DO NOT RUN IN CONDUIT WITH HIGHER VOLTAGE CIRCUITS.

32 MAX. CIRCUIT RATING 115 VOLTS, 180 VA INRUSH, 1150 VA SEALED.

33 SEE INSTALLATION MANUAL FOR SENSOR MOUNTING INSTRUCTIONS.

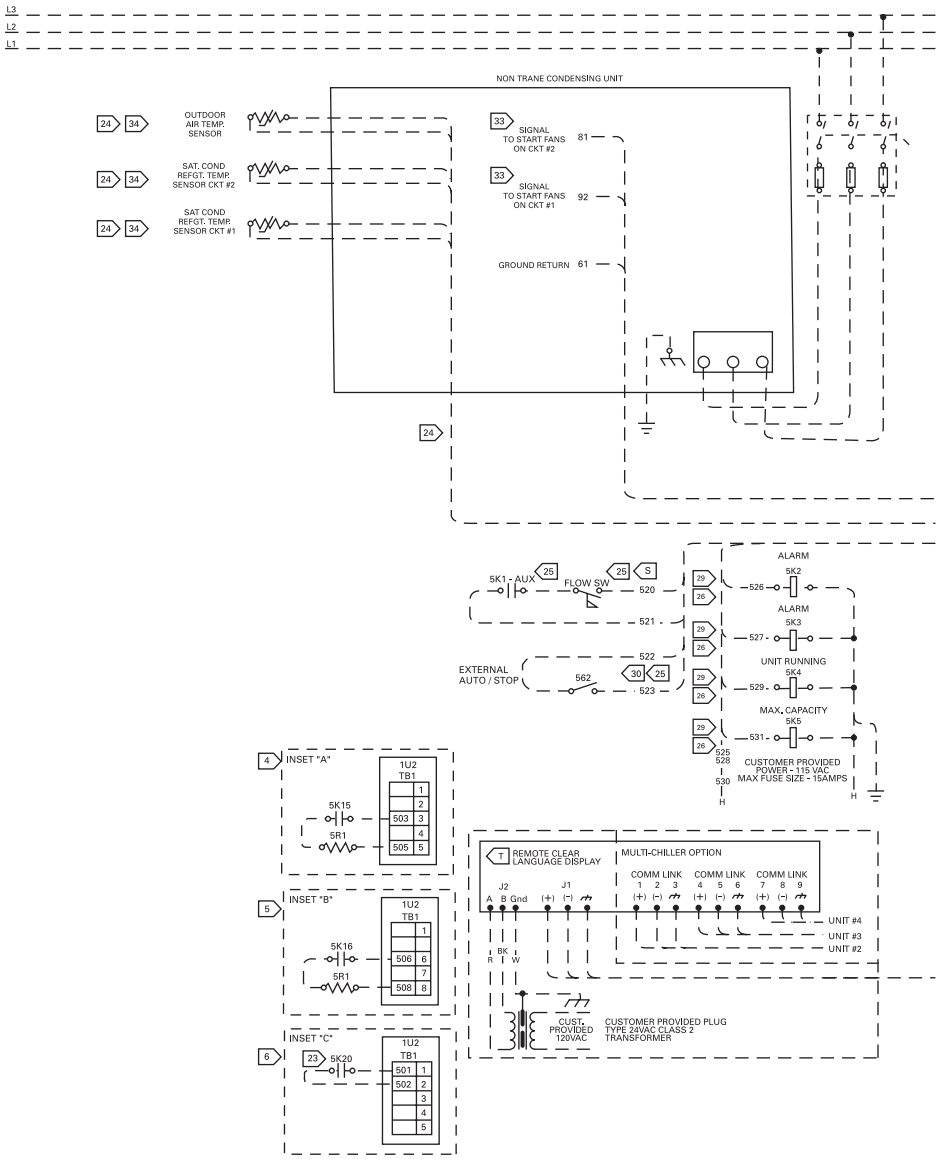

⚠ WARNING

HAZARDOUS VOLTAGE!

DISCONNECT ALL ELECTRIC POWER INCLUDING REMOTE DISCONNECTS AND FOLLOW LOCK OUT AND TAG PROCEDURES BEFORE SERVICING. INSURE THAT ALL MOTOR CAPACITORS HAVE DISCHARGED STORED VOLTAGE. UNITS WITH VARIABLE SPEED DRIVE, REFER TO DRIVE INSTRUCTIONS FOR CAPACITOR DISCHARGE.

FAILURE TO DO THE ABOVE BEFORE SERVICING COULD RESULT IN DEATH OR SERIOUS INJURY.

⚠ AVERTISSEMENT

TENSION DANGEREUSE!

COUPER TOUTES LES TENSIONS ET OUVRIR LES SECTIONNEURS À DISTANCE, PUIS SUIVRE LES PROCÉDURES DE VERROUILLAGE ET DES ÉTIQUETTES AVANT TOUTE INTERVENTION. VÉRIFIER QUE TOUS LES CONDENSATEURS DES MOTEURS SONT DÉCHARGÉS. DANS LE CAS D'UNITÉS COMPORTANT DES ENTRAÎNEMENTS À VITESSE VARIABLE, SE REPORTER AUX INSTRUCTIONS DE L'ENTRAÎNEMENT POUR DÉCHARGER LES CONDENSATEURS.

NE PAS RESPECTER CES MESURES DE PRÉCAUTION PEUT ENTRAÎNER DES BLESSURES GRAVES POUVANT ÊTRE MORTELLES.

⚠ ADVERTENCIA

¡VOLTAJE PELIGROSO!

DESCONECTE TODA LA ENERGÍA ELÉCTRICA, INCLUSO LAS DESCONEXIONES REMOTAS Y SIGA LOS PROCEDIMIENTOS DE CIERRE Y ETIQUETADO ANTES DE PROCEDER AL SERVICIO. ASEGÚRESE DE QUE TODOS LOS CAPACITORES DEL MOTOR HAYAN DESCARGADO EL VOLTAJE ALMACENADO. PARA LAS UNIDADES CON EJE DE DIRECCIÓN DE VELOCIDAD VARIABLE, CONSULTE LAS INSTRUCCIONES PARA LA DESCARGA DEL CONDENSADOR.

EL NO REALIZAR LO ANTERIORMENTE INDICADO, PODRÍA OCASIONAR LA MUERTE O SERIAS LESIONES PERSONALES.

Wiring Diagrams

RTUA with non-Trane condenser

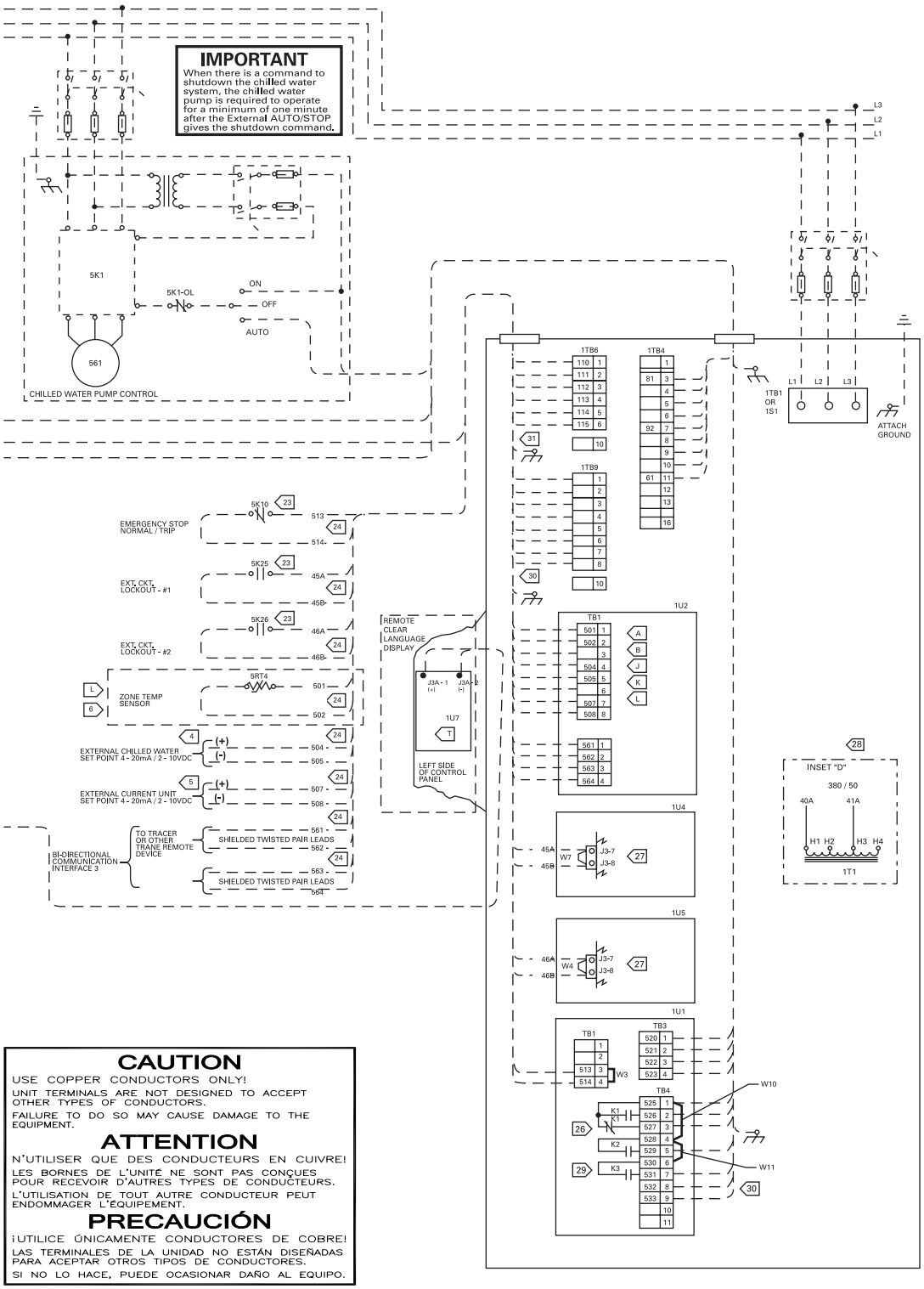

CAUTION

USE COPPER CONDUCTORS ONLY!

UNIT TERMINALS ARE NOT DESIGNED TO ACCEPT OTHER TYPES OF CONDUCTORS.

FAILURE TO DO SO MAY CAUSE DAMAGE TO THE EQUIPMENT.

ATTENTION

N'UTILISER QUE DES CONDUCTEURS EN CUIVRE!

LES BORNES DE L'UNITÉ NE SONT PAS CONÇUES POUR RECEVOIR D'AUTRES TYPES DE CONDUCTEURS.

L'UTILISATION DE TOUT AUTRE CONDUCTEUR PEUT ENDOMMAGER L'ÉQUIPEMENT.

PRECAUCIÓN

¡UTILICE ÚNICAMENTE CONDUCTORES DE COBRE!

LAS TERMINALES DE LA UNIDAD NO ESTÁN DISEÑADAS PARA ACEPTAR OTROS TIPOS DE CONDUCTORES.

SI NO LO HACE, PUEDE OCASIONAR DAÑO AL EQUIPO.

Wiring Diagrams

RTCA

CAUTION

USE COPPER CONDUCTORS ONLY!

UNIT TERMINALS ARE NOT DESIGNED TO ACCEPT OTHER TYPES OF CONDUCTORS.

FAILURE TO DO SO MAY CAUSE DAMAGE TO THE EQUIPMENT.

ATTENTION

N'UTILISER QUE DES CONDUCTEURS EN CUIVRE!

LES BORNES DE L'UNITÉ NE SONT PAS CONÇUES POUR RECEVOIR D'AUTRES TYPES DE CONDUCTEURS.

L'UTILISATION DE TOUT AUTRE CONDUCTEUR PEUT ENDOMMAGER L'ÉQUIPEMENT.

PRECAUCIÓN

¡UTILICE ÚNICAMENTE CONDUCTORES DE COBRE!

LAS TERMINALES DE LA UNIDAD NO ESTÁN DISEÑADAS PARA ACEPTAR OTROS TIPOS DE CONDUCTORES.

SI NO LO HACE, PUEDE OCASIONAR DAÑO AL EQUIPO.

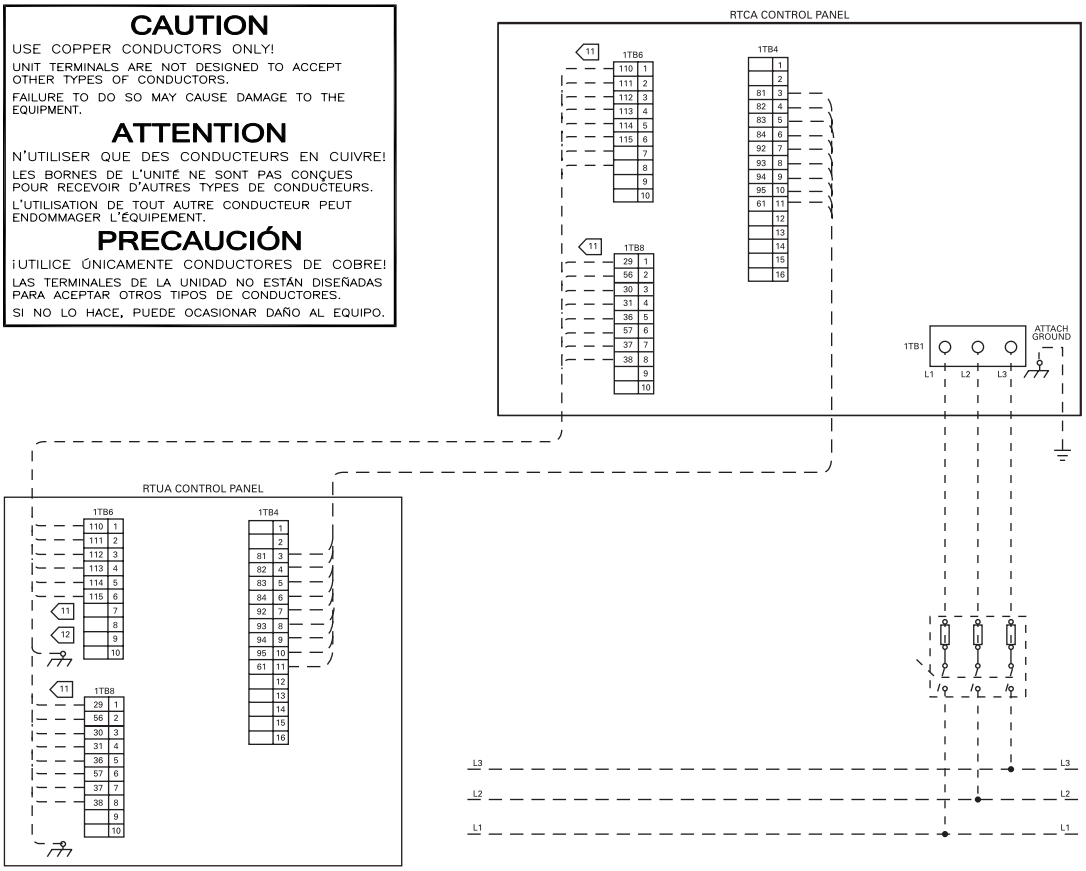

CUSTOMER WIRE SELECTION TABLE			
POWER WIRE SELECTION TO MAIN TERMINAL BLOCK (1TB1)			
UNIT SIZE	UNIT VOLTAGE	TERMINAL BLOCK SIZE	CONNECTOR WIRE RANGE
70 - 125	200, 230 346, 380, 400, 460, 575	175	#14 TO 2/0

CONTROL WIRE SELECTION FOR 30 VOLT OR LESS CIRCUITS – SEE NOTE 24	
WIRE SIZE	MAXIMUM LENGTH FOR SENSOR LEADS
14 AWG	5000 FT
18 AWG	2000 FT
18 AWG	1000 FT

FUSE REPLACEMENT SECTION				
FUSE DESCRIPTION	UNIT SIZE	UNIT VOLTAGE	FUSE TYPE	FUSE SIZE
INVERTER/AUTO-TRANSFORMER FUSE (1F18-1F23)	ALL	575/460/380/60 380/415/346/50	CLASS CC (600 V)	6 AMP
		200/230/60	CLASS CC (600V)	10 AMP

NOTES:

1. DASHED LINES INDICATE RECOMMENDED FIELD WIRING BY OTHERS. PHANTOM LINES INDICATE ALTERNATE CIRCUITRY OR AVAILABLE SALES OPTION. CHECK SALES ORDER TO DETERMINE IF WIRING IS REQUIRED FOR SPECIFIC OPTIONS.
2. ALL THREE PHASE MOTORS SUPPLIED WITH THE UNIT ARE PROTECTED UNDER PRIMARY SINGLE PHASE FAILURE CONDITIONS.
3. CAUTION - DO NOT ENERGIZE UNIT UNTIL CHECK OUT AND START-UP PROCEDURES HAVE BEEN COMPLETED.

WIRING AND CONTACT REQUIREMENTS:

10. ALL FIELD WIRING MUST BE IN ACCORDANCE WITH THE NATIONAL ELECTRICAL CODE (NEC), STATE, AND LOCAL REQUIREMENTS. OUTSIDE THE UNITED STATES, OTHER COUNTRIES APPLICABLE NATIONAL AND/OR LOCAL REQUIREMENTS SHALL APPLY.

11 30 VOLT OR LESS CIRCUIT. DO NOT RUN IN CONDUIT WITH HIGHER VOLTAGE CIRCUITS. USE #14-18 AWG. SEE SELECTION TABLE.

12 RECOMMEND USING 3 RUNS OF 2 CONDUCTORS #18 AWG 600V 80 C, 100% SHIELDED WITH DRAIN WIRE (BELDON 8305 OR EQUIVALENT). DO NOT RUN IN CONDUIT WITH HIGHER VOLTAGE CIRCUITS.

13 RECOMMEND USING 1 RUN OF 8 CONDUCTORS #22 AWG 300V 80 C, 100% SHIELDED WITH DRAIN WIRE (BELDON 8305 OR EQUIVALENT). DO NOT RUN IN CONDUIT WITH HIGHER VOLTAGE CIRCUITS.

⚠ WARNING

HAZARDOUS VOLTAGE!

DISCONNECT ALL ELECTRIC POWER INCLUDING REMOTE DISCONNECTS AND FOLLOW LOCK OUT AND TAG PROCEDURES BEFORE SERVICING. INSURE THAT ALL MOTOR CAPACITORS HAVE DISCHARGED STORED VOLTAGE. UNITS WITH VARIABLE SPEED DRIVE, REFER TO DRIVE INSTRUCTIONS FOR CAPACITOR DISCHARGE.

FAILURE TO DO THE ABOVE BEFORE SERVICING COULD RESULT IN DEATH OR SERIOUS INJURY.

⚠ AVERTISSEMENT

TENSION DANGEREUSE!

COUPER TOUTES LES TENSIONS ET OUVRIR LES SECTIONNEURS À DISTANCE, PUIS SUIVRE LES PROCÉDURES DE VERROUILLAGE ET DES ÉTIQUETTES AVANT TOUTE INTERVENTION. VÉRIFIER QUE TOUS LES CONDENSATEURS DES MOTEURS SONT DÉCHARGÉS. DANS LE CAS D'UNITÉS COMPORTANT DES ENTRAÎNEMENTS À VITESSE VARIABLE, SE REPORTER AUX INSTRUCTIONS DE L'ENTRAÎNEMENT POUR DÉCHARGER LES CONDENSATEURS.

NE PAS RESPECTER CES MESURES DE PRÉCAUTION PEUT ENTRAÎNER DES BLESSURES GRAVES POUVANT ÊTRE MORTELLES.

⚠ ADVERTENCIA

¡VOLTAJE PELIGROSO!

DESCONECTE TODA LA ENERGÍA ELÉCTRICA, INCLUSO LAS DESCONEXIONES REMOTAS Y SIGA LOS PROCEDIMIENTOS DE CIERRE Y ETIQUETADO ANTES DE PROCEDER AL SERVICIO. ASEGÚRESE DE QUE TODOS LOS CAPACITORES DEL MOTOR HAYAN DESCARGADO EL VOLTAJE ALMACENADO. PARA LAS UNIDADES CON EJE DE DIRECCIÓN DE VELOCIDAD VARIABLE, CONSULTE LAS INSTRUCCIONES PARA LA DESCARGA DEL CONDENSADOR.

EL NO REALIZAR LO ANTERIORMENTE INDICADO, PODRÍA OCASIONAR LA MUERTE O SERIAS LESIONES PERSONALES.

Dimensional Data

Figure D-1 — Water Cooled Series R® Standard Length Condensers 70-100 Ton

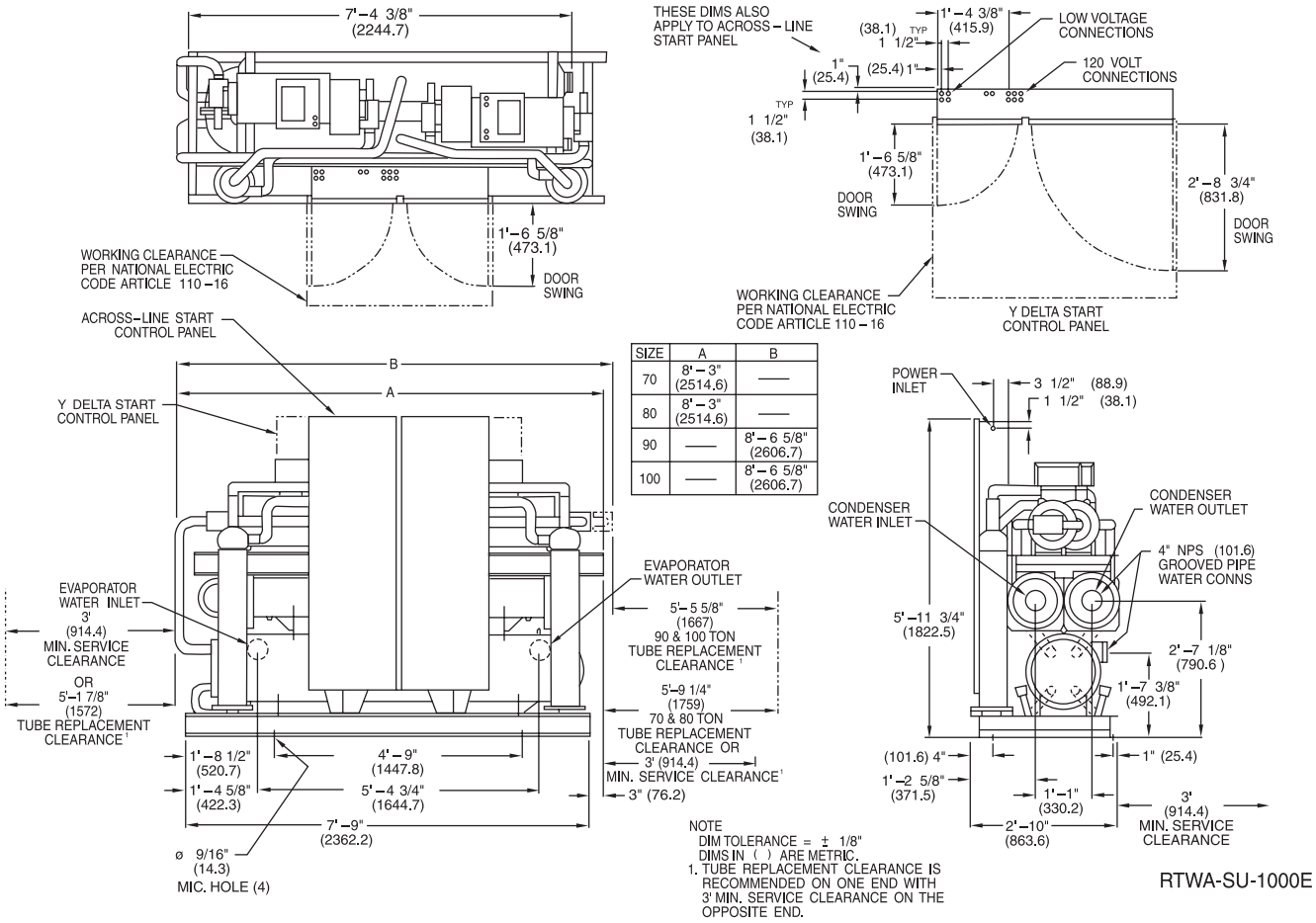

SIZE	A	B
70	8'–3" (2514.6)	——
80	8'–3" (2514.6)	——
90	——	8'–6 5/8" (2606.7)
100	——	8'–6 5/8" (2606.7)

Figure D-2 — Water Cooled Series R® Standard Length Condensers 110-125 Ton

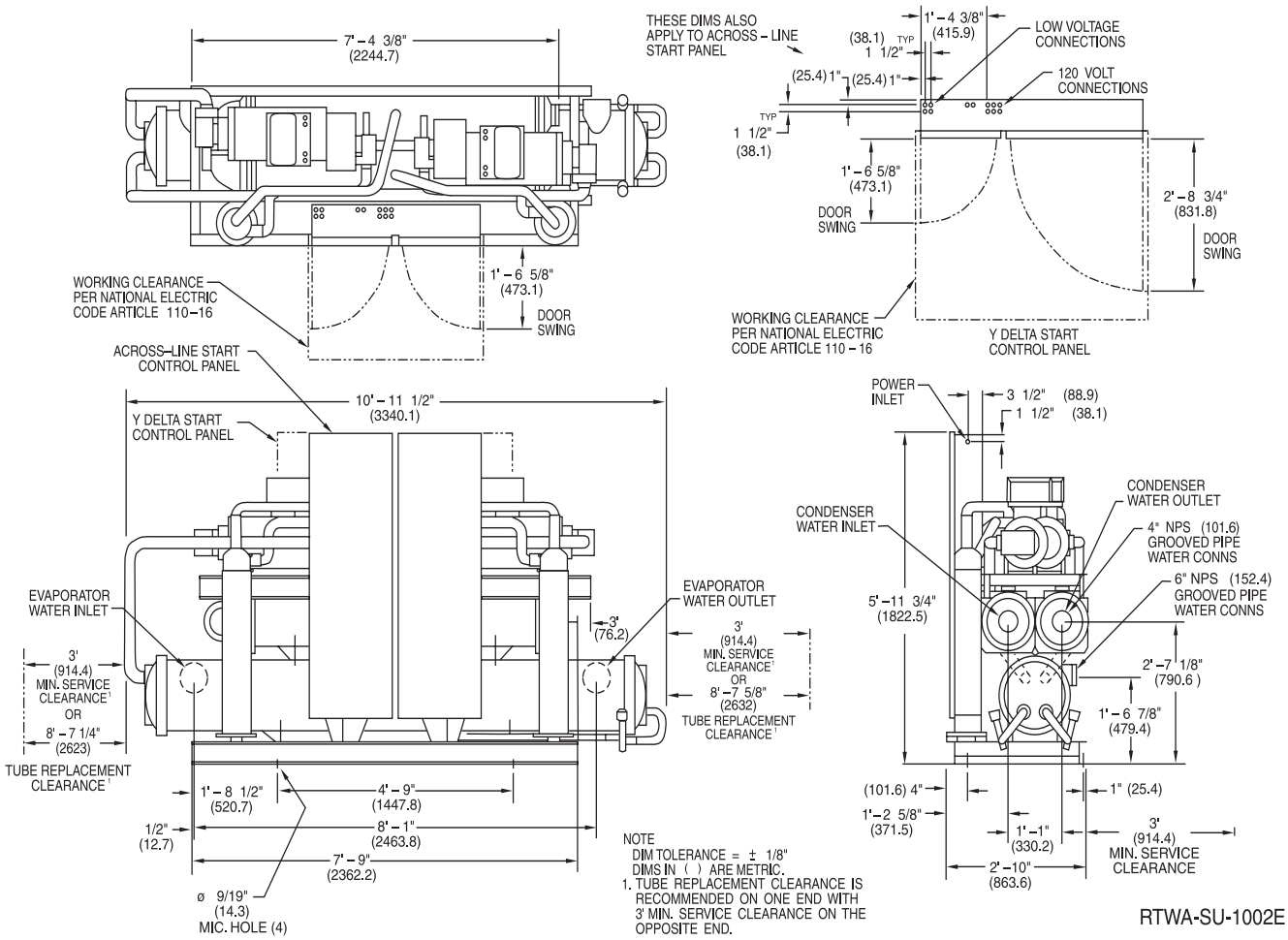

Figure D-3 — Water Cooled Series R® Long Length Condensers 70-100 Ton

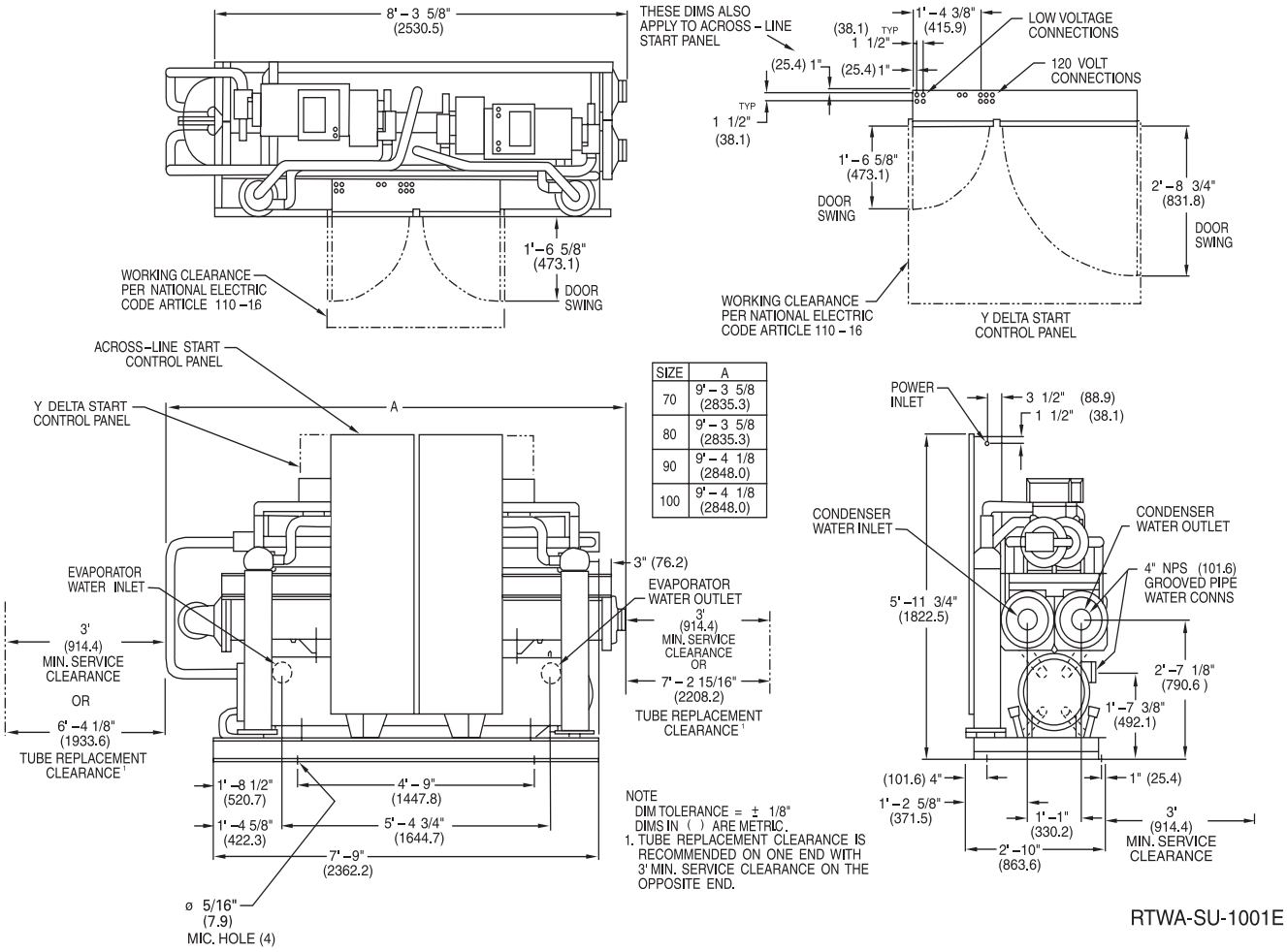

Dimensional Data

Figure D-4 — Water Cooled Series R® Long Length Condensers 110-125 Ton

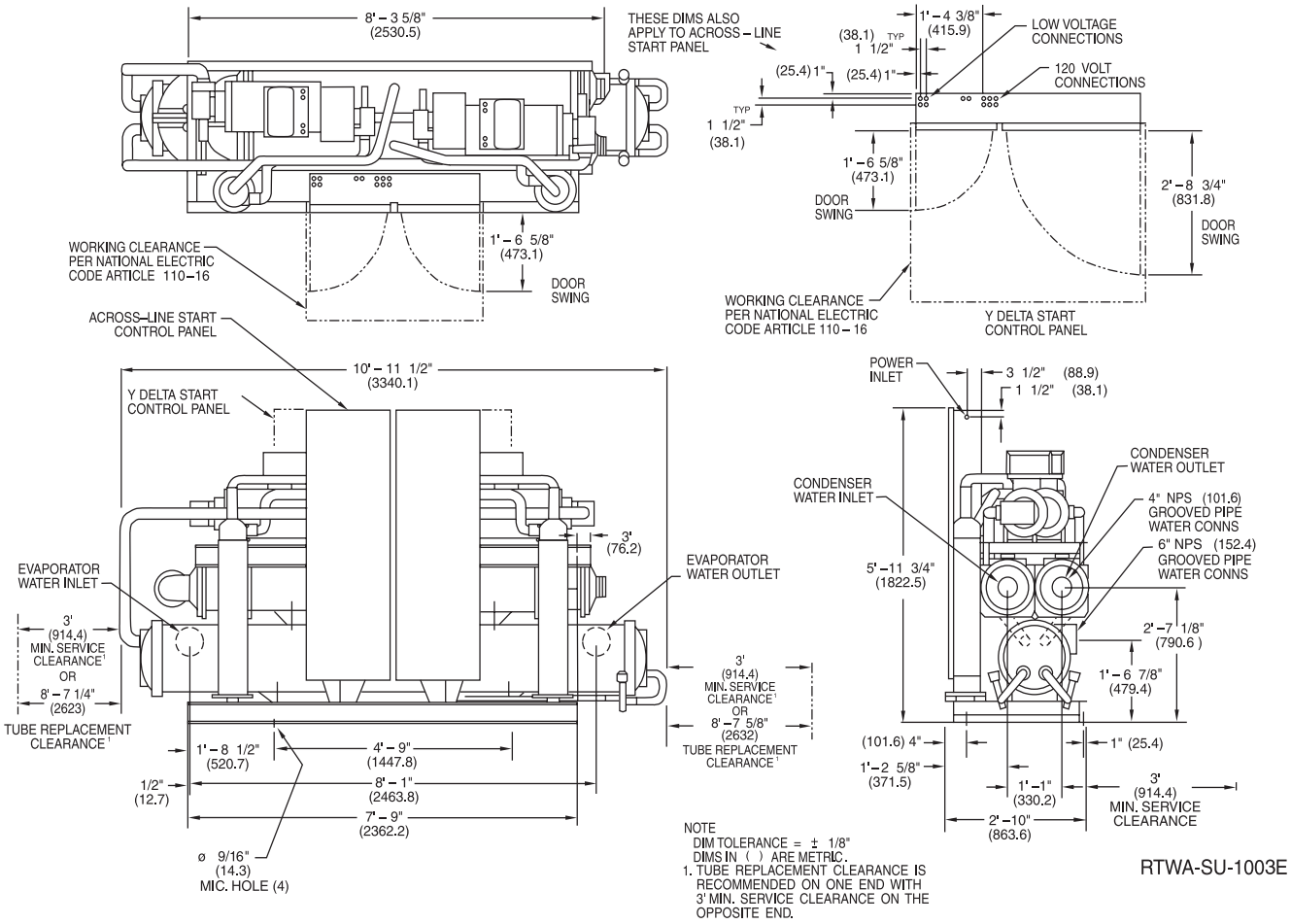

Figure D-5 — RTUA Compressor Chiller 70-100 Ton

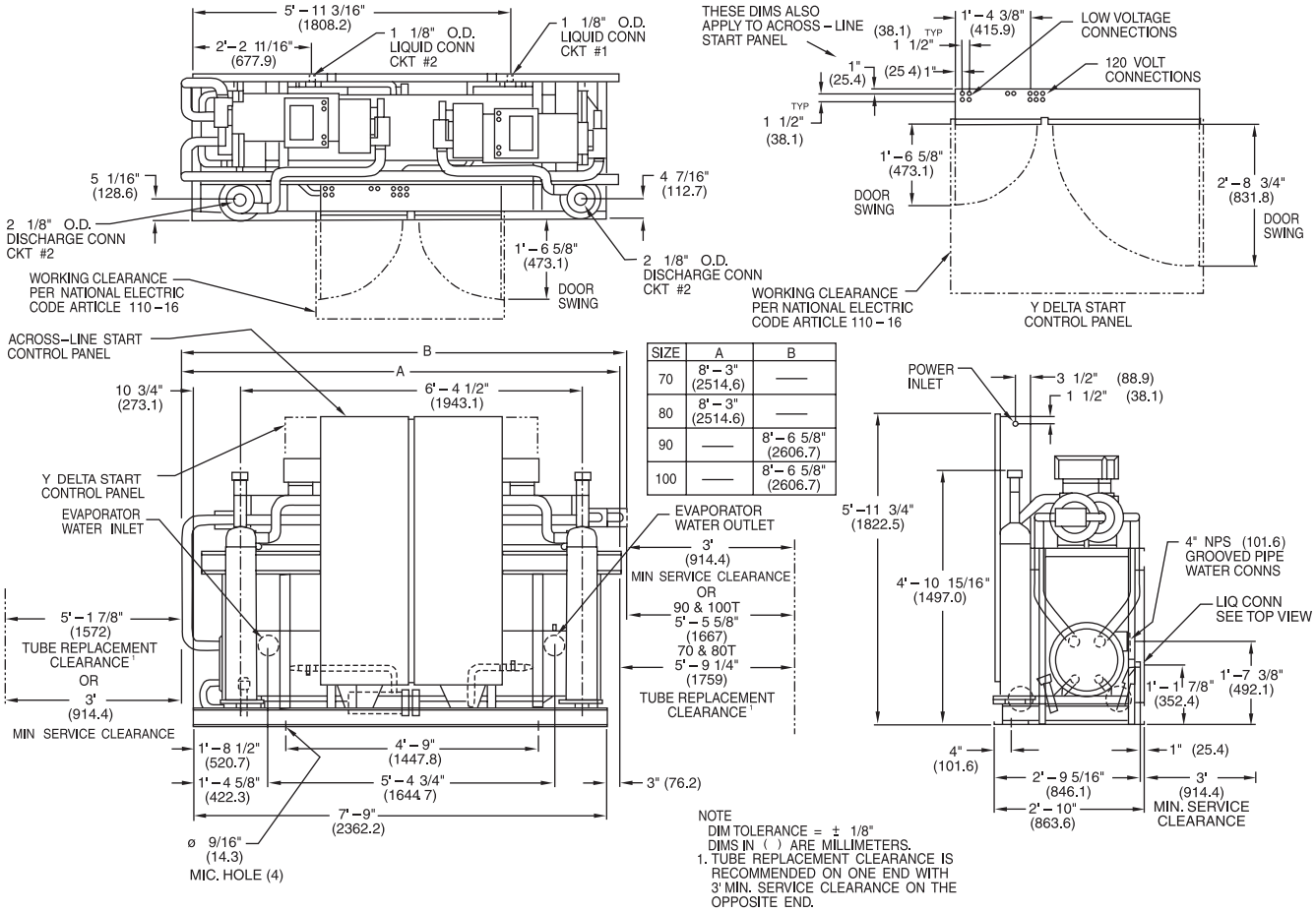

SIZE	A	B
70	8' – 3" (2514.6)	——
80	8' – 3" (2514.6)	——
90	——	8' – 6 5/8" (2606.7)
100	——	8' – 6 5/8" (2606.7)

Dimensional Data

Figure D-6 — RTUA Compressor Chiller 110-125 Ton

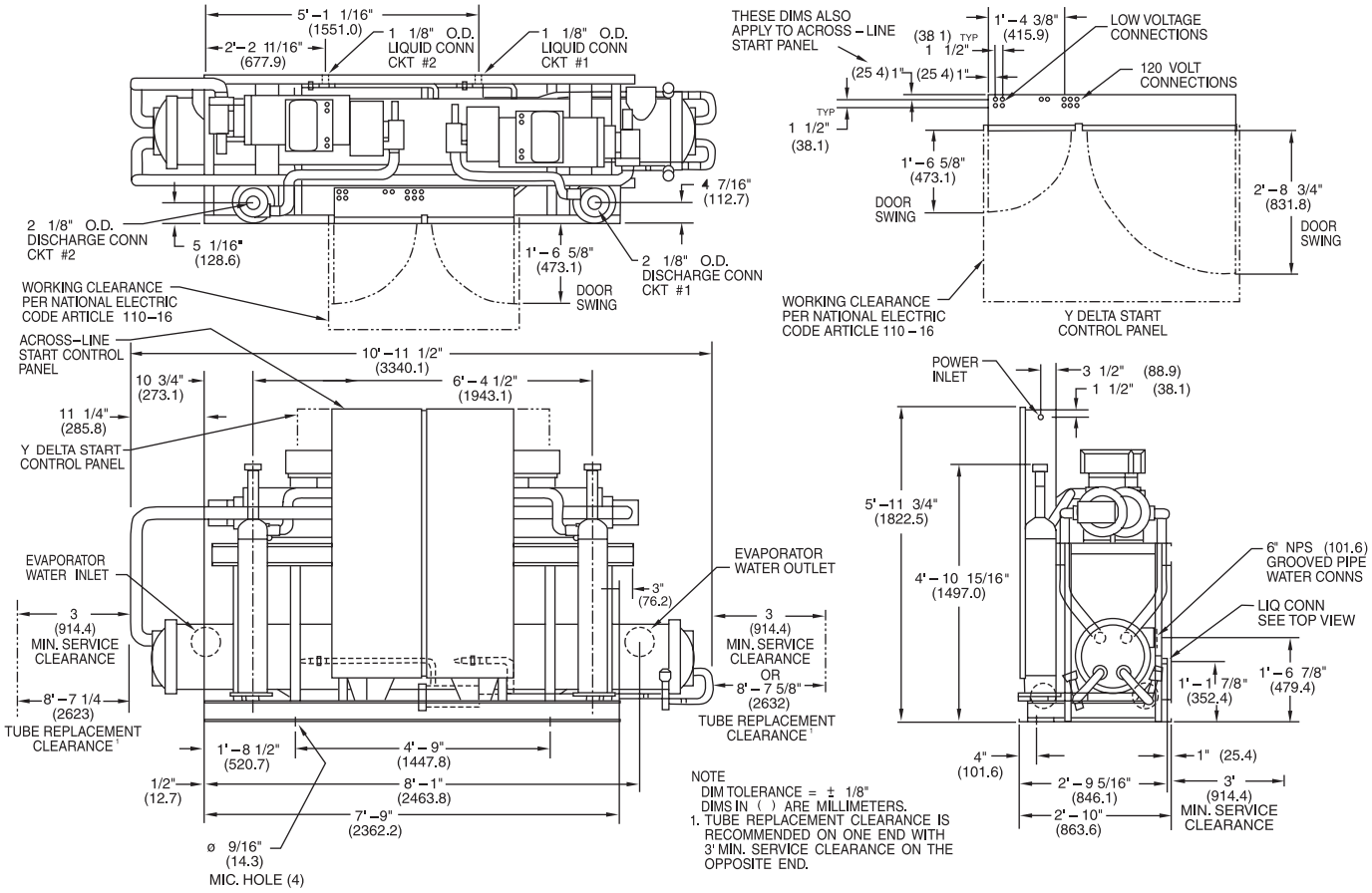

RTUA-SU-1001C

Dimensional Data

RTCA

Figure D-7 — Series R® Air Cooled Condenser Rotary Liquid Chiller RTCA 70-125 Ton

UNIT SIZE	A	B	C	D	E	F	G	H
70—80	16' - 2 1/2" (4940.3)	7' - 7 1/4" (2317.8)	4' - 7" (1397.0)	10' - 8" (3251.2)	1 5/8" (41.3)	1 5/8" (41.3)	6" (152.4)	6" (152.4)
90	16' - 2 1/2" (4940.3)	7' - 7 1/4" (2317.8)	4' - 7" (1397.0)	10' - 8" (3251.2)	1 5/8" (41.3)	2 1/8" (54.0)	6" (152.4)	6 1/4" (158.8)
100	16' - 2 1/2" (4940.3)	7' - 7 1/4" (2317.8)	4' - 7" (1397.0)	10' - 8" (3251.2)	2 1/8" (54.0)	2 1/8" (54.0)	6 1/4" (158.8)	6 1/4" (158.8)
100—125	18' - 5 1/2" (5626.1)	8' - 3 3/4" (2533.7)	4' - 11 1/2" (1511.3)	12' - 8" (3880.8)	2 1/8" (54.0)	2 1/8" (54.0)	6 1/4" (158.8)	6 1/4" (158.8)

NO. OF FANS PER UNIT						
UNIT SIZE	70	80	90	100	110	125
NO. FANS STD UNIT	8	8	9	10	10	10

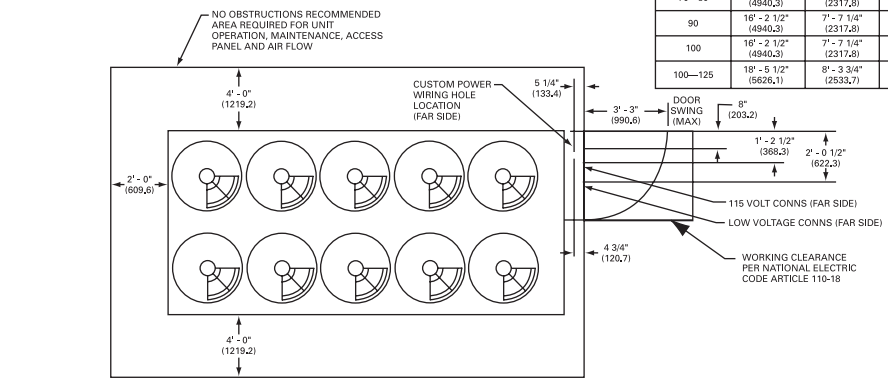

PLAN VIEW

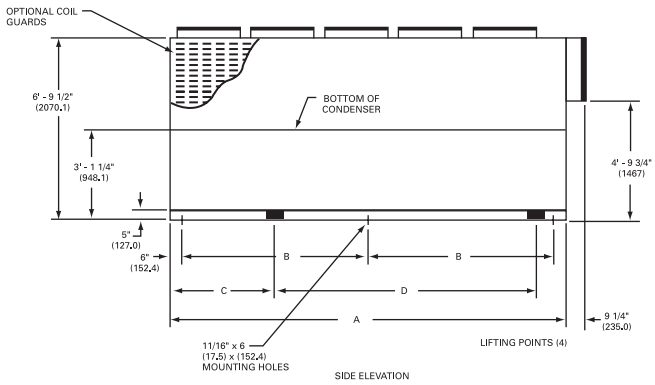

SIDE ELEVATION

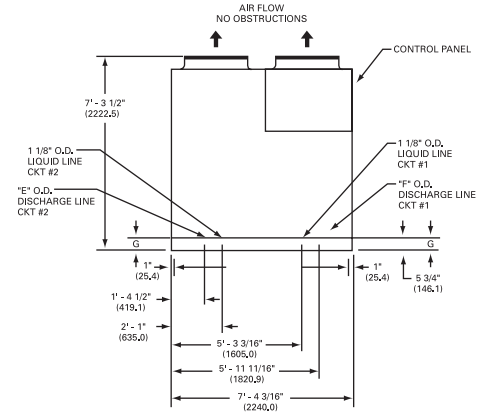

END ELEVATION

Options

RTWA and RTUA Options

Non-Fused Power Disconnect Switch: A non-fused molded case switch is provided for disconnecting main power through the control panel door.

Isolators: Elastomeric isolators are available for field installation beneath unit frame.

Low Leaving Fluid Temperature: The unit controls can be factory set to handle low temperature brine applications (0 F to 39 F or -17.8 C to 3.9 C).

Ice Making: The unit controls can be factory set to handle ice making for thermal storage applications.

Long Condenser Shell: (RTWA only) All unit sizes are available with long condenser shell option for superior operating efficiency.

High Temperature Condenser: (RTWA only) Available to handle high leaving condenser water temperatures (110 F to 130 F or 43.3 C to 54.4 C))

Condenser Water Temperature Sensors: (RTWA only) Factory installed and tested condenser entering and leaving water temperature sensors with digital display.

Building Automation System Communication Interface: Permits either bi-direction communication to the Trane Integrated Comfort™ system or permits remote chilled water setpoint and demand limiting by accepting a 4-20 mA or 2-10 VDC analog signal.

Chilled Water Reset: This option provides the control logic and field installed sensors for either load based (return water temperature) or temperature based (ambient or zone) reset of leaving chilled water temperature.

Remote Display: A menu driven, digital display with two 40 character lines provides a full array of operating condition and diagnostic readouts to a remote location via a twisted wire pair. Can control up to four units on one display.

Low Ambient Lockout: (RTUA only) A field-installed low ambient sensor (factory installed if ordered with mating RTCA Series air-cooled condenser) and control logic can prevent starting below desired operating temperatures.

Condenser Refrigerant Sensors: Necessary option to obtain pressure and temperature readouts when using RTUA with non-Trane condenser.

Two-Way Water Regulating Valves: Provide head pressure control with low entering condenser water temperatures.

RTCA Options

Architectural Louvered Panels: Louvered panels cover the complete condensing coil and the service area beneath the coils.

Coil Protection: Louvered panels cover the condenser coils.

Access Guard: A wire mesh that covers only the service area beneath the condenser coils.

Unit Isolation: Neoprene isolators are offered for unit isolation from the building structure.

Low Ambient Operation: Allows the condenser to operate to -10 F (-23.3 C).

Mechanical Specifications

General
RTWA units are quality run-tested using refrigerant and water, and ship with a full operating charge of refrigerant and oil. RTUA compressor chiller units ship with a full operating charge of oil and a nitrogen holding charge. RTUA components are extensively factory tested (compressors, evaporator, controls, and overall unit). Exposed surfaces are painted with an air-dry beige primer-finisher prior to shipment. All air-cooled Series R® RTCA condensers are factory tested to confirm operation prior to shipment. Units are leak and pressure tested at 450 psig high side, then evacuated and charged with a nitrogen holding charge.

RTCA unit panels, structural elements and control boxes are constructed of galvanized steel and mounted on a welded structural galvanized steel base. Unit panels and control boxes are finished with a baked-on powder paint. All paint meets the requirement for outdoor equipment for the U.S. Navy and other Federal Government Agencies.

Compressor-Motor
Two direct drive 3600, 60 Hz (3000, 50 Hz) rpm, semi- hermetic Trane helical rotary screw compressors. Each compressor has: standard suction and discharge service valves; internal 5 micron oil filtration; internal pressure relief to suction; high oil temperature protection; loss of oil charge protection; low oil flow protection; double mesh suction inlet screen; electrically actuated variable and step unloaders; rubber-in-shear isolator mountings.

Motor is suction gas cooled and suitable for voltage utilization ranges of ±10 percent from nameplate voltage. One sensor in each motor winding protects against excessive winding temperatures.

Evaporator
Dual circuited, shell and tube design with seamless internally finned, copper tubes roller expanded into tube sheets. Designed, tested, and stamped in accordance with ASME pressure vessel code for refrigerant side working pressure of 300 psig. Water side working pressure is 215 psig. One water pass with a series of internal baffles. Each shell contains temperature sensors to provide leaving water temperature control, freeze protection and low refrigerant temperature protection; as well as vent and drain connection and .75 inch Armaflex II or equal insulation
(k = 0.28).

Condenser (RTWA only)
Two independent shell and tube condensers designed with seamless internally/externally finned tubes expanded into tube sheets. Designed, tested, and stamped in accordance with ASME pressure vessel code for refrigerant side working pressure of 450 psig. Connected in series on the water side with single inlet and outlet piping connection, and a waterside working pressure of 150 psig. Each condenser includes a subcooler circuit, and an oil cooling circuit. Tubes are cleanable and replaceable.

Condenser and Fans (RTCA only)
Air-cooled condenser coils have aluminum fins mechanically bonded to internally finned seamless copper tubing. The condenser coil has an integral subcooling circuit. Condensers are factory proof and leak tested at 506 psig.

Direct drive vertical discharge condenser fans are dynamically balanced. Three-phase condenser fan motors with permanently lubricated ball bearing and internal thermal protection are provided. Standard units will start and operate down to 25 F (-3.8 C) ambient.

Refrigerant Circuit
All unit have two completely independent refrigeration circuits. Each circuit includes an oil separator, liquid line service valves, filter drier with removable core, combination moisture indicator-sightglass, electronic expansion valve, charging valve and insulated suction lines. Low-side relief valves are provided for each circuit(300 psi).

Control Panel
All controls, including sensors, are factory mounted and tested prior to shipment. All catalogued units are UL listed. Microcomputer controls provide all control functions including start-up and shut down, leaving chilled water temperature control, compressor and electronic expansion valve modulation, anti-recycle logic, automatic lead/lag compressor starting and load limiting. RTUA controls include fan staging (if used with matching Trane RTCA air-cooled condenser). The controller also provides control outputs for the chilled water pump.

The unit control module, utilizing Adaptive Control™ microprocessor automatically takes action to avoid unit shutdown due to abnormal temperature, and motor current overload. Should the abnormal operating condition continue until a protective limit is violated, the unit will be shut down.

Unit protective functions include loss of chilled water flow, evaporator freezing, low refrigerant pressure, reverse rotation, compressor starting and running over current, phase loss, phase imbalance, phase reversal, and loss of oil flow.

The standard controls package also includes digital cycle counters and hour meters for each compressor, under/over voltage protection, remote alarm contacts, compressor run indication contacts, maximum capacity contacts, percent volts display, and a percent rated amps (each compressor) display.

A menu driven, digital display with two 40 character lines provides a full array of operating conditions and diagnostic readouts.

All RTCA unit controls are housed in a weathertight enclosure. All controls, including sensors, are factory mounted and tested prior to shipment.

Standard power connections include three phase power. A control power transformer is standard equipment.

Starter
Across-the-line starters are standard on all 380/400/460/575 volt units. Wye-Delta closed transition starters (33 percent of LRA inrush) are standard on 200/230 volt units and an available option on 380/400/460/575 volt units.

Trane
A business of American Standard Companies
www.trane.com

For more information contact your local district office, or e-mail us at comfort@trane.com

Literature Order Number	RLC-PRC027-EN
Date	December 2006
Supersedes	RLC-DS-4 1199